1. 1
2. 2
2.1 2
2.2 2
2.3 4
2.4 4
3. 5
3.1 5
3.2 18
3.3 22
3.4 83
3.5 134
3.6 136
4. 140
4.1 140
4.2 158
4.3
..... 165
4.4 201
5. 203
5.1 203
5.2 205
5.3 206
5.4 209
5.5 210
5.6 211
6. 212
6.1 212
7. 213
7.1 213
7.2 217
7.3 223

1.

8
2015 8
39596 5000
6186 177 300

2004 4
[2004]35 2005 9 “ ”
200 2017 8
[2017]224
5t/a 2t/a
2019 1 3 200t/a
20t/a 1t/a 5t/a
“ ”
200 20
9000 200
20
5 30 5
3 3 20 5 5
20 10
200 20 5
30 5 2023 7 19
([2023]43)

300t/a 100t/a 2t/a
94t/a 50t/a 200t/a 20t/a
1t/a 5t/a
( )

( ) (“
”) ( )
(HJ941-2018)

2.

2.1

(1)
(
) ( ) (HJ941-2018)

(2)

(3)

2.2

2.2.1

(1) (2015.1.1)
(2) (2007.11.1)
(3) (2021.9.1)
(4) (2019.4.23)
(5) (2013.12.7)
(6) 2018 10 26)
(7) (2018.1.1)
(8) (2022 6 5
)
(9) (2020 9 1)
(10) (2019 1 1)
(11) (2015.5.27)
(12) (
41 2017.3.6)
(13) (2015)
(14) (2021.1.1)
(15) (34)
(16) ( ) (
[2015]4)
(17) (2024)
(18) (2018)
(19) (2015)
(20) (2021)

(21) < >
(2021 69)
(22)
[2012]77
(23) (
[2012]98)
(24) < ( ) > (
[2014]34)
(25)
([2022]248
(26)
([2017]74)
(27) [2020]1)
(28)
[2020]150
(29) <
> [2023]7

2.2.2

(1) [2014]34
(2) (HJ/T941-2018)
(3) (HJ169-2018)
(4) ( ) (
2016 74)
(5) (GB18218-2018)
(6) (GB50016-2014)
(7) (GB20576-2006)
(8) (GB13690-2009)
(9) ([2005]272)
(10) (HJ523-2009)
(11) GB18597-2023
(12) ([2014]33) (
[2014]33)
(13) < ( ) > (
[2017]38)
(14) < ( ) > (
[2020]47)
(15) (
)

(16) (GB50483-2019)

2.2.3

(1)

[2004]35

(2) 200

([2017]224

(3)

2.3

300t/a

100t/a 2t/a 94t/a 50t/a

200t/a 20t/a 1t/a 5t/a

2.4

2.4-1

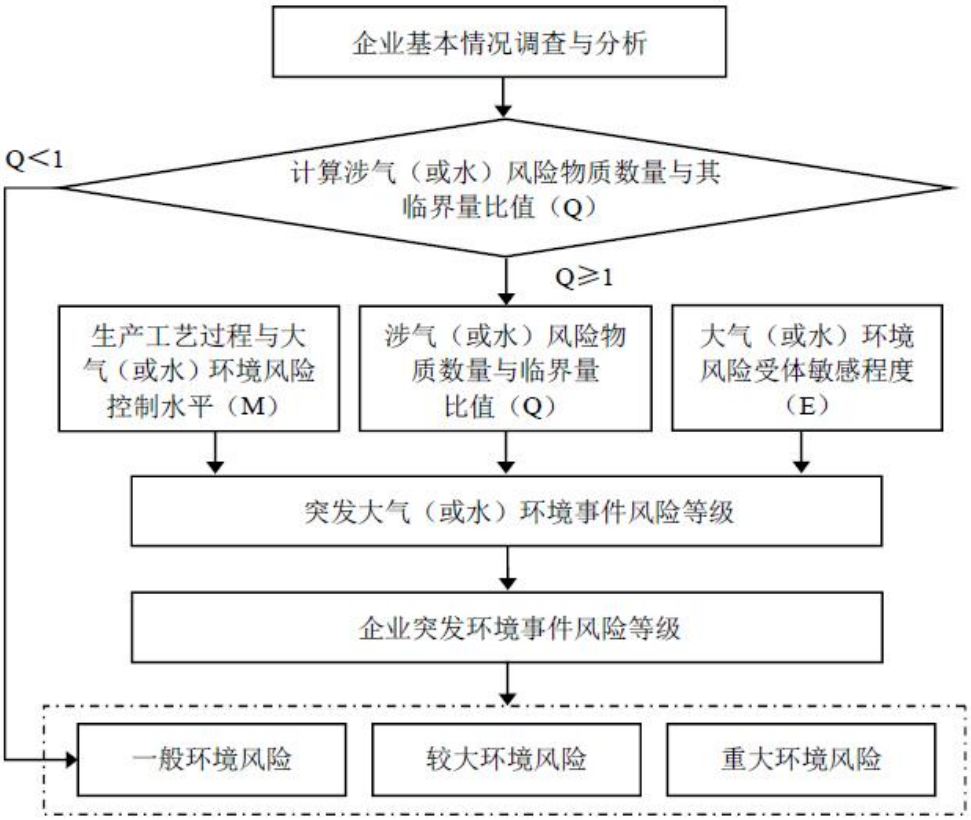

2.4-1

3.

3.1

3.1.1

3.1-1

3.1-1

	3.1-1
	8
	118°52′21.31″
	33°18′46.52″
	15952319701
	300t/a 100t/a 2t/a 94t/a 50t/a 200t/a 20t/a 1t/a 5t/a
	39596㎡
	177 , 37 140

编 号 320800666202110190005

统一社会信用代码
91320800747328 16X3

营业执照

扫描二维码登录"国家企业信用信息公示系统"了解更多登记、备案、许可、监管信息。

名 称 江苏正济药业股份有限公司
类 型 股份有限公司(非上市)
法定代表人 徐俊
经营范围 原料药制造、销售；医药中间体制造、销售；医药技术转让、开发、咨询服务；自营和代理各类商品及技术的进出口业务。（依法须经批准的项目，经相关部门批准后方可开展经营活动）
注册资本 7998.7万元整
成立日期 2003年04月04日
营业期限 2003年04月04日至******
住 所 淮安市洪泽区巢湖东路8号

登记机关 淮安市行政审批局
2021 年 10 月 19 日

国家企业信用信息公示系统网址：http://www.gsxt.gov.cn
国家市场监督管理总局监制

3.1-1

3.1.2

(1) 3.1-2

3.1-2

			(t/a)
			300
			100
			2
			94
			50
			200.00
			20.00
			1.00
			5.00
		20%	1000

(2) 3.1-4

3.1-4

		1	2F 963㎡
		1	1126.34
		1	206.16
		1	1F 483.74
		1	706.4
		1	2F 75.6
		1	51.6
		1	21.84
	6# ( )	1	1051.25㎡
	5# ( )	1	1087.19㎡
	4# ( )	1	1513.75㎡
		1	404.79㎡
	3	1	234.748 ㎡
	1	1	1F 547.20㎡
	2	1	1427.4㎡
		1	1F 1206.76㎡
	1/2 2	1	594.13 ㎡, 2 1
		, 80㎥/h	
		5.2㎥/h	([2020] B08290190)

		,300d/t	
		1000KVA 630KVA 1	700 KWh/a
		200t/d	1.2Mpa 220
		450m³/d	140KPa
		+ + + + + +RTO	
		+ + +RTO	
		+ + + + + +RTO	
		+ +Vaportek + + + + + +RTO	
			247m²
			100m²
			—
		14×8×4.5m	504m³
		14×7.6×3.5m	372.4m³
		1	90.89 m²
		“ + + + ” “UASB+ +EGSB+AO+BAF + + ”	300t/d
	( )		300.02 m²

3.1.3

3.1.3.1

7

3.1.3.2

13.8-14.8 , 14 210-230
2250-2350
52% 958.8mm
3.1-4

3.1-4

		14.0			101.51kPa
		39.5			2.56m/s
		-21.5			2250h
		958.8mm			35.1d
		207.9mm			SE NE E
		1524.7mm			ESE
		76%			ENE

3.1.3.3

(1)
5m 1.5m
10-11m 7.5m 12m
2-8m “ ” 354km
60km
12.5m
2090km^2 31 m^3 135 m^3
330 m^3
(2)
( )
73.3km 0.04 1592km^2 70m
30m 3.59m 73.5m^3/s 2.3m 4.5m^3/s
( ) (2021 2030)
2021
205
GB 3838—2002
(3)
( )
35.8km ( ) (2021 2030)
2020

(4)
23.9

15 8 26.4277 /
( ) (2021 2030)
2023

(5)

12 8.5
11 8.5
(6)
17.8km 6.4km 5.0
5.5m 113.4km²
5.70m 6.50m
83.96km² 9463 m³ 5823 m³ 7.50m
11468 m³ 8.00m 110.59km²
20024 m³ 12450 m³ 6.56m
8.16m 5.42m ( )
(2021 2030)

( )

S350 S350

3.1.3.4

[2020]1
[2018]74
3.1-6

3.1-6

		/	100	NE 2.8km
		500 500 100 1000 500 100	/	SW 10km
		1 4 119°06′30"E 33°17′06"N 119°07′16" E 33°17′26"N 119°07′16"E 33°16′26"N 119°07′30"E 33°16′28"N 2 4 119°06′25"E 33°12′20"N 119°07′06"E 33°12′18"N 119°07′30"E 33°16′28"N 119°07′02"E 33°11′21"N		E 22km
				S 23km
		118°48'23"E 33°17'10"N 118°50'39"E 33°19'25"N 118°48'23"E 33°19'25"N		W 3km

			/	W 2.5km
			/	SW 5.4km
		1500	/	W 2.7km
			/	E 18km

3.1.4

3.1-7

3.1-7

[redacted]

[redacted]

3.1.5

3.1.5.1

1

GB3095-2012 NH_3 H_2S HCl

HJ2.2-2018 D

DMF

3.1-8

3.1-8

	mg/Nm^3			
SO_2	0.50	0.15	0.06	
NO_x	0.25	0.10	0.05	
NO_2	0.20	0.08	0.04	
CO	10	4	-	GB3095-2012
PM_{10}	/	0.15	0.07	
$PM_{2.5}$	/	0.075	0.035	
NH_3	0.2	-	-	
H_2S	0.01	-	-	
HCl	0.05	0.015	-	
	3.0	1.0	-	HJ2.2-2018 D
	0.2	-	-	
	0.05	-	-	
	0.8	-	-	
[3]	2.0	-	-	
	$9*10^{-6}$	-	-	
	0.1	0.1	-	
	0.2	0.2	-	
	0.1	0.1	-	
	3.6pgTEQ/m^3	1.2 pgTEQ/m^3	0.6 TEQpg/m^3	
	0.06	0.17	-	[2]

2

RTO

DB 32/4042-2021 1 2 3 7

DB 32/4042-2021

5

DB32/4041-2021 1

DB 32/4042-2021 7
VOCs 3.1-10

3.1-10

		mg/m³			
1		6	1h		DB 32/4042-2021 7
		20			

3.1.5.2

1

— GB3838-2002
— S50K
S50K—
3.1-11

3.1-11 (mg/L PH)

	pH	SS	COD_{Mn}	COD_{Cr}	BOD	SS				
	6-9	30	6	20	4	30	1.0	1.0	0.2	0.05
	6-9	60	10	30	6	60	1.5	1.5	0.3	0.5
	6-9	150	15	40	10	150	2.0	2.0	0.4	1.0
	GB3838-2002 GB3838 2002 SS SL63 94									

2

GB18918-2002 A
GB3838-2002
2020 0.13mg/L
A 12mg/L
GB3838-2002 3.1-12

3.1-12 mg/L pH

	mg/L						
	pH	CODcr	BOD_5	SS	NH_3-N	TN	TP
	6 9	500	350	400	45	70	8
	6 9	60	20	20	8 15	20	1
	6 9	50	10	10	5 8	15	0.5

12 ≤ 12

3.1.5.3

1

GB3096-2008 3 3.1-13

3.1-13 dB(A)

3	65	55

2

GB12347-2008 3 3.1-14

3.1-14 dB(A)

3	65	55

3.1.5.4

GB/T14848-2017 3.1-15

3.1-15 mg/L

1	pH	6.5 8.5			5.5 6.5 8.5 9	<5.5 >9
2	($CaCO_3$)	≤150	≤300	≤450	≤650	650
3		≤300	≤500	≤1000	≤2000	2000
4		≤50	≤150	≤250	≤350	350
5		≤50	≤150	≤250	≤350	350
6		≤0.001	≤0.001	≤0.002	≤0.01	0.01
7	(COD_{Mn})	≤1.0	≤2.0	≤3.0	≤10	10
8		≤0.02	≤0.10	≤0.50	≤1.50	1.50
9	(MPN/100mL)	≤3.0	≤3.0	≤3.0	≤100	100
10	(CFU/mL)	≤100	≤100	≤100	≤1000	1000
11		≤1.0	≤1.0	≤1.0	≤2.0	2.0
12		≤0.0001	≤0.0001	≤0.001	≤0.002	0.002
13		≤0.001	≤0.001	≤0.01	≤0.1	0.1
14		≤0.005	≤0.01	≤0.05	≤0.1	0.1
15		≤0.005	≤0.005	≤0.01	≤0.1	0.1
16		≤0.0001	≤0.001	≤0.01	≤0.01	0.01
17		≤0.1	≤0.2	≤0.3	≤2.0	2.0
18		≤0.05	≤0.05	≤0.1	≤1.5	1.5
18	(N)	≤0.01	≤0.10	≤1.00	≤4.80	4.80
19	(N)	≤2.0	≤5.0	≤20.0	≤30.0	30.0
		GB/T14848-2017				

3.1.5.5

( ) (GB36600-2018)) 3.1-16

3.1-16 (mg/kg pH)

		CAS		
1		7440-38-2	60	140
2		7440-43-9	65	172
3	( )	18540-29-9	5.7	78
4		7440-50-8	18000	36000
5		7439-92-1	800	2500
6		7439-97-6	38	82
7		7440-02-0	900	2000
8		56-23-5	2.8	36
9		67-66-3	0.9	10
10		74-87-3	37	120
11	1,1-	75-34-3	9	100
12	1,2-	107-06-2	5	21
13	1,1-	75-35-4	66	200
14	-1,2-	156-59-2	596	2000
15	-1,2-	156-60-5	54	163
16		75-09-2	616	2000
17	1,2-	78-87-5	5	47
18	1,1,1,2-	630-20-6	10	100
19	1,1,2,2-	79-34-5	3.8	50
20		127-18-4	53	183
21	1,1,1-	71-55-6	840	840
22	1,1,2-	79-00-5	2.8	15
23		79-01-6	2.8	20
24	1,2,3-	96-18-4	0.5	5
25		75-01-4	0.43	4.3
26		71-43-2	4	40
27		108-90-7	270	1000
28	1,2-	95-50-1	560	560
29	1,4-	106-46-7	20	200
30		100-41-4	28	280
31		100-42-5	1290	1290
32		108-88-3	1200	1200
33	+	108-38-3 106-42-3	570	570

		CAS		
34		95-47-6	640	640
35		98-95-3	76	760
36		62-53-3	260	663
37	2-	95-57-8	2256	4500
38	[a]	56-55-3	15	151
39	[a]	50-32-8	1.5	15
40	[b]	205-99-2	15	151
41	[k]	207-08-9	151	1500
42		218-01-9	1293	12900
43	[a, h]	53-70-3	1.5	15
44	[1,2,3-cd]	193-39-5	15	151
45		91-20-3	70	700

3.1.6

3.1-17 [2023]5

1	< “ ” > [2023]5	1. “ ” 2 “ ” 2023 “ ” “ ” “ ” “ ” 3. “ - - ” “ ”	1 “ ” 2 “ ” 2 3 “ - - ” “ ” 18678886076 4	

		2024 2025 4.		

3.2

3.2.1

8 2

5km 3.2-1

3.2-1 5km

			(km)	( )	
		SE	1.707	720	
		SE	1.773	650	
	.	SE	1.252	650	
		S	1.492	1300	
		SE	1.874	1500	
		S	1.386	720	
		SW	1.560	720	
		SE	1.966	1300	
		SE	1.454	4000	
		SE	1.850	720	
		SE	1.831	1440	
0-2000m		SW	1.303	1080	GB3095-2012
		SE	0.926	360	
		SE	1.382	860	
		SE	1.630	1440	
		S	1.158	580	
		SE	1.041	550	
		SE	1.252	1500	
		SE	1.460	200	
		SE	1.976	230	
		SE	1.446	1200	
		SW	1.200	2160	
		SW	1.858	1300	
		SW	1.951	1440	

			(km)	( )	
		SW	1.9	1200	
		SW	1.935	800	
		SW	1.931	600	
		SW	1.374	1600	
		SW	1.736	850	
		SW	1.682	650	
		SW	1.793	700	
		SW	1.537	1880	
		NE	3.790	290	
		NE	3.778	60	
		SE	2.113	1440	
		SE	2.585	430	
		SE	2.544	650	
		SE	2.873	1800	
		SE	2.317	1600	
		SE	2.555	720	
		SE	3.020	2160	
		SE	2.733	860	
		SE	2.80	1200	
	.	SE	3.039	720	
		SE	2.365	1650	
		SE	2.309	850	
		SE	3.012	1800	
	.	SE	3.20	1800	
2000-40		SE	2.094	360	
00m		SE	2.517	600	
		SE	2.222	720	
		SE	2.122	360	
		SE	2.227	1080	
		SE	2.323	1800	
		SW	2.313	200	
		SE	2.330	780	
		SE	2.187	1400	
		SW	2.751	1440	
		SW	3.576	360	
		SW	3.885	360	
		SE	3.843	70	
		SW	2.869	720	
		SW	2.673	850	
		SW	2.554	720	
		SW	2.371	290	
		SW	2.205	720	

			(km)	( )	
		SW	2.25	580	
		SW	2.889	430	
		SW	2.982	1080	
		SW	3.253	580	
		S	3.70	720	
		S	3.289	1440	
		S	3.015	650	
		SE	3.736	750	
		S	2.568	1000	
		SW	2.103	790	
		SE	3.304	1000	
		SE	2.921	720	
		SW	2.389	1300	
		SE	3.257	1800	
		SE	2.721	860	
		SW	2.531	640	
		SW	2.254	1300	
		SW	3.856	720	
		SE	3.343	1500	
		SE	3.104	720	
		SW	2.554	590	
		SE	2.853	720	
		SE	3.112	580	
		SW	3.963	1440	
		SE	3.396	1080	
		S	2.768	1300	
		SE	3.181	860	
		SE	3.575	720	
		SW	3.638	720	
		SE	2.501	250	
		SE	3.857	150	
		SW	3.368	720	
	A	SW	3.329	430	
		SW	3.385	580	
		SW	3.74	1440	
		SW	2.858	720	
		SW	3.320	1080	
		SW	3.499	580	
		SW	2.10	1800	
		SW	3.245	400	
		SW	3.086	280	
		SW	2.983	720	
4000-50		NE	4.423	100	

			(km)	( )	
00m		NE	4.123	70	
		NE	4.536	220	
		SW	4.20	650	
		SE	4.532	360	
		SE	4.207	70	
		SE	4.257	430	
		SE	4.656	150	
		SE	4.150	450	
		SW	4.136	1440	
		SW	4.166	280	
		S	4.152	400	

3.2-2 500m

			(m)	( )
1		W	130	150
2		WN	140	100
3		E	28	80
4		E	28	30
5		SE	236	50
6		SE	118	30
7		SE	168	40
8		SN	97	60
9	( )	E	340	120
10		SE	361	50
11		SE	470	70
12		SE	470	30
13		SE	124	100
14		SE	178	30
15		SE	84	80
16		SE	125	90
17		SW	85	90
18		SW	138	150
19		S	298	70
20		SE	297	50
21		S	360	80
22		S	373	80
23		SW	309	20
24		SW	327	30
25		SE	307	50
26		SE	403	50
27		SE	313	45

28		SE	410	60
29		SE	443	80
30		SE	345	90
31		SE	395	150
32		SE	249	70
33		SE	475	80

3.2-1 5 10.612
500 (
2355) 5km

3.2.2

→
→ → ( )→ ( )

163.5
2
→ → →
→ →

24 10km
3.2-2

3.2-2 10km

			(m)	
1	---	33°17′15.8″ 118°45′46.8″	3508	S
2	---	33°21′45.9″ 118°54′33.8″	6089	NE

3.3

3.3.1

“ ”
3.3-1 3.3-2

3.3-1

			(CAS)	( ) (t)		
		4-	$C_4H_6N_2$/822-36-6	104.886		2
			$(CH_2O)n$/30525-89-4	41.954		2

			(CAS)	( ) (t)		
			HCl/7647-01-0	629.315	15m³ (31%) 3m³+5 m³+10m³ (24%)	
			C_2H_8ClNS/156-57-0	145.162		2
			$C_3H_6OS_2$/868-84-8	195.088		3
			NaOH/1310-73-2	171.174		2
			CH_5N /74-89-5	65.93		2
			C_2H_6O/64-17-5	0.734		1
			-	0.449		2
			$C_{10}H_{18}N_2OS$/871-76-1	93.596		1
			$H_8N_2O_2S$ /61832-41-5	63.336		2
			C_2H_6O/64-17-5	169.659		1
		70%	HCl64-17-5	51.724		1
			NaOH/1310-73-2	58.495	30m³	
			NaOH/1310-73-2	151.37	30m³	
			C_2H_6O/64-17-5	2.71		1
			-	3.38		2
			$C_6H_{12}CL_2N_6S_2$	86.05		
			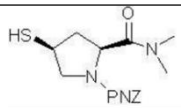	64.15		
		40%	CH_5N/124-40-3	147.136		1
		31%	HCl/7647-01-0	334.286	15m³	
			C_2H_8ClNS/156-57-0	89.561		
			$C_8H_{14}ClNO_2$/81074-81-9	121.171		1
			$C_5H_6O_2$/98-00-0	99.533		1
		37%	CH_2O /50-00-0	86.551		1
			NaOH/1310-73-2	386.341	30m³	
		( )	SO_2Cl_2/7791-25-5	40.046		2
			NH_3/7664-61-7	22.159		
			C_5H_{12}/8032-32-4	26.697		2
		31%	HCl/7647-01-0	26.697	15m³	
			C_3H_6O/67-64-1	64.249		1
			C_2H_6O/64-17-5	20.986		1
			-	32.037		2
			C_9H_9N/2947-61-7	98.51		2

			(CAS)	( ) (t)		
			$C_3H_6O_3$ /616-38-6	67.9		1
			K_2CO_3/584-08-7	0.31		2
			NaOH/1310-73-2	30.05		2
		31%	HCl/7647-01-0	98.51	15m^3	
			C_7H_8/108-88-3	1.42		1
			NaH/7647-69-7	34.48		2
			C_5H_8O /120-92-3	58.01		2
			CH_3CH_2ONa /141-52-6	17.87		2
			$NCCH_2CN$ 109-77-3	8.25		2
			$CH_6N_4O_3$/506-93-4	16.76		2
			$NaNO_2$/7632-00-0	8.18		2
		31%	HCl/7647-01-0	14.55	15m^3	
			C_8H_7N /140-29-4	14.55		1
		9030--01	$C_{20}H_{17}FO_6$	6.54		2
			$C_6H_{16}AlNaO_4$22722-98-1	4.965		2
			Cl_2O_2S /7791-25-5	3.285		1
		N4-	/	4.51		2
			$(CH_3)_3SiNHSi(CH_3)_3$ /3385-94-2	1.655		2
			C_6H_5Cl/108-90-7	25.52		1
			$SnCl_4$/7646-78-8	9.195		2
			CH_2Cl_2/75-09-2	17.17		1
			$C_2H_4O_2$/64-19-7	27.275		2
			CH_3ONa/124-41-4	1.6		2
		30%	CH3-OH HCl	3.595		2
			$C_4H_8O_2$/141-78-6	0.8		1
			C_6HF_5O/771-61-9	3.145		2
			$C_6H_5Cl_2O_2P$ /770-12-7	3.775		2
		L-	$C_6H_{13}NO_2$/39825-33-7	2.265		2
			C_4H_8O /109-99-9	1.59		1
			$C_6H_{15}N$/121-44-8	3.39		1
			C_4H_9ClMg/677-22-5	3.905		2

			(CAS)	( ) (t)		
		31%	HCl/7647-01-0	57.85	15m^3	
			$C_5H_{12}O$ /1634-04-4	0.59		1
			C_4H_9Li/109-72-8	16.2		2
			$C_{15}H_{14}O_3$	7.49		2
			C_4H_8O /109-99-9	6.63		1
		C06	91424-40-7	6.15		2
			HCl/7647-01-0	102.9	15m^3 +	/ 1
			-	0.56		2
			H_2/1333-74-0	0.04		1
			CH_4O/67-56-1	3.24		1
			CH_2Cl_2/75-09-2	1.3		1
			$C_3H_5ClO_2$/541-41-3	1.61		2
			$C_6H_{15}N$/121-44-8	1.51		1
			$C_{19}H_{19}BrP$/1779-49-3	9.87		2
			C_5H_{12}/8032-32-4	4.58		2
			$C_{19}H_{14}FNO$ 121660-37-5	1.47		2
			C_7H_8/108-88-3	0.16		1
			$C_6H_{14}O$/108-20-3	0.43		2
			C_2H_3N/75-05-8	0.55		1
			HF/7664-39-3	39		2
			$NaBH_4$/16940-66-2	0.24		2
			$C_5H_{13}BO$/7397-46-8	1.76		2
			K_2CO_3/584-08-7	11.18		2
			NaOH/1310-73-2	0.12		2
			C_2H_6O/64-17-5	2.27		1
			$CaCl_2$/10043-52-4	0.41		2
			$C_{10}H_{16}N_6S$ 51481-61-9	300		
			$C_{13}H_{22}N_4O_3S$ 66357-35-5	100		
			$C_8H_{15}N_7O_2S_3$ 76824-35-6	2		
			$C_{10}H_{18}N_2OS$/871-76-1	94		
			$H_4N_2O_2S$/7803-58-9	50		
			$C_{15}H_{17}NaO_3$ 80382-23-6	200		
			$C_{12}H_{11}N_7$/396-01-0	20		
			$C_5OH_{46}CaF_2N_2O_8$ /147526-32-7	1		

		(CAS)	( ) (t)		
		$C_{22}H_{29}FN_3O_9P$/ 1190307-88-0	5		
		CH_3NaS /5188-07-8	1000	2×30m^3	
		H_2O_2/7722-84-1	39	15m^3	
		H_2SO_4/7664-93-9	28	15m^3	
		NaOH/1310-73-2	300	30m^3	
	(COD≥ 1000mg/L NH_3-N≥ 2000 mg/L)	-	5566.5	-	
		-	453.218		

3.3-2

		(t)			(t)	(t)
4-	0.9459	10			2	-
	0.3784	6			2	1
31%	5.6757	25.3938	15m³ (31%) m³+10m³ (24%)	3m³+5	( )	7.5
	1.5000	15			2	-
	3.9869	15			3	-
	3.4981	4.0			2	-
	2.9700	3.6			2	-
	0.0150	0.5			1	500*
	0.1000	1			2	-
	1.4910	10			1	-
	1.0090	5			2	-
	0.5700	14			1	500*
70%	0.1800	5			1	500*
	1.0000	32.4	30m³			-
	0.4912	32.4	30m³			-
	0.0220	0.5			1	500*
	0.0005	0.14			2	-
	0.2865	2				-
	0.2135	2				-
	0.1528	3			1	

			(t)		(t)			(t)	
			0.4000		5			-	
			0.1972		10		1	-	
			0.1620		10		1	-	
		37%	0.1408		3		1	0.5	
			1.0000		32.4	30㎥		-	
			0.6757		10		2	5	
			0.3739	0.98㎥	2			5	
			0.4504		0.2		2	10	
		31%%	2.5000		13.164	15㎥	( )	7.5	
			0.9000		10		1	10	
			0.5000		14		1	500	
			0.0100		0.14		2	-	
			2.9544		10		2	-	
			2.0363		10		1	-	
			0.0093		0.2		2	-	
			1.0000		4		2	-	
		31%	1.0000		13.164	15㎥	( )	7.5	
			0.0060		0.5		1	10	
			0.1469		1		2	-	
			0.2471		2		2	-	
			1.2502		3		2	-	
			0.0200		0.4		2	100	
			0.0400		0.5		2	-	

				(t)			(t)		(t)	
			0.2000		2		2		100	
		31%	0.2000		13.164	15m³	( )		7.5	
			0.1386		0.8		1		1	
		9030--01	0.02		0.2		2		-	
			0.01		0.1		1		-	
			0.01		0.1		2		50	
		N4-	0.2135		2		2		-	
			0.0783		1		2		-	
			1.2081		2.5		1		5	
			0.7500		1.8		2			
			0.5000		10		1		10	
			0.0909		6		2		10	
			0.0053		0.5		2		-	
		30%	0.0120		0.5		2		10	
			0.0027		0.2		1		10	
			0.0105		2		2		-	
			0.0126		3		2		-	
		L-	0.0076		2		2		-	
			0.0053		1		1		-	
			0.0113		2		1		-	
			0.5000		0.5		2		-	
		31%	0.1928		13.164	15m³	( )		7.5	
			0.0020		1		1		-	
			0.0500		0.4		2		-	
			0.2470		0.5		2		-	
			0.2187		6		1		-	
		C06	0.1000		0.5		2		-	

			(t)		(t)			(t)	
		31%	1.5000		13.164+1.6	15m³ +	( )/1	7.5	
			0.0002		0.1		2	-	
			0.00001		0.02		1	-	
			0.0004		1		1	10	
			0.0004		1		1	10	
			0.0004		0.2		2	200	
			0.0027		1		1	-	
			0.0027		2		2	200	
			0.0013		2		2	10	
			0.0004		0.5		2	-	
			0.00004		0.1		1	10	
			0.0001		0.2		2	-	
			0.0002		0.2		1	10	
			0.0108		1		2	1	
			0.0001		0.2		2	-	
			0.0005		0.2		2	-	
			0.0031		2		2	-	
			0.00003		0.05		2	-	
			0.0006		2		1	500*	
			0.0001		0.05		2	-	
			1.5		5			-	
			1.5		2			-	
			0.5		1			-	
			0.5		1			-	
			0.5		1			-	
			0.5		5			-	
			0.5		1			-	

		(t)		(t)			(t)	
		0.5		0.4			-	
		0.5		0.2			-	
	20%	3		53.76	2×30m³		-	-
		-	-	13.56	15m³		-	
		-	-	19.2	15m³		10	
		-	-	32.4	30m³		-	
	(COD≥10000mg/L NH_3-N≥2000 mg/L)	-	-	150			10	
		-	-	120			50	
		-	-	0.665		DN63 261 DN57 7 240 0.3Mpa	10	
		-	-	0.754		DN100 120	10	

RTO RTO

3.3.2

(HJ941-2018)

3.3-3

			(t)	(t)	Q	
1	2		6.0000	1	6.0000	8.054
			10.1000	5	2.0200	
			0.4000	100	0.0040	
			2.0000	100	0.0200	
			2.0000	200	0.0100	
2	1		0.8000	1	0.8000	6.689
			0.6000	10	0.0600	
			31.0000	500	0.0620	
			5.0000	-	-	
		30%	1.5000	7.5	0.2000	
		70%	3.5000	500	0.0070	
			3.0000	5	0.6000	
		37%	3.0000	-	-	
		37%	1.1100	0.5	2.2200	
			10.0000	10	1.0000	
			2.5000	5	0.5	
			11.0	10	1.1000	
			0.2	10	0.0200	
			1.0	10	0.1000	
			0.2	1	0.0200	
		31%	1.6	-	-	
		37%	1.3405	7.5	0.1787	
3	2		2.2000	10	0.2200	1.8827
		30%	0.5000	-	-	
		70%	0.3500	7.5	0.0467	
		30%	0.1500	10	0.0150	
			0.2000	200	0.0010	
			6.0000	10	0.6000	
			1.0000	1	1.0000	
4			2.0000	5	0.4000	0.4000
5			0.3784	1	0.3784	1.0124
		31%	5.6757	-	-	
		37%	4.7553	7.5	0.634	
			0.0150	500	0.00003	
6			1.0920	500	0.0022	0.7324
			0.1800	-	-	
		30%	0.0540	7.5	0.0072	
		70%	0.1260	500	0.0003	
			0.1528	5	0.0306	
		31%	3.2638	-	-	
		37%	2.7345	7.5	0.3646	
		37%	0.1408	-	-	

			(t)	(t)	Q	
		37%	0.0521	0.5	0.1042	
			0.3739	5	0.0748	
			0.4504	10	0.0450	
			0.9000	10	0.0900	
			0.6757	50	0.0135	
		31%	2.8928	-	-	
		37%	2.4237	7.5	0.3232	
			0.0060	10	0.0006	
			0.2000	100	0.0020	
			0.2000	100	0.0020	
			0.1386	1	0.1386	
			0.0100	50	0.0002	
			1.2081	5	0.2416	
			0.5004	10	0.0500	
			0.0909	10	0.0091	
7		30%	0.0120	-	-	0.7801
		70%	0.0084	7.5	0.0011	
		30%	0.0036	10	0.0004	
			0.0027	10	0.0003	
			0.0004	10	0.00004	
			0.0004	200	0.000002	
			0.0027	200	0.00001	
			0.0013	10	0.0001	
			0.0002	10	0.00002	
			0.0108	1	0.0108	
			0.0006	500	0.000001	
8		37%	21.2756	7.5	2.8367	4.7567
			19.2	10	1.9200	
9			150	10	15.000	15
10			120	50	2.4000	2.4
11			1.419	10	0.1419	0.1419

1 2 2

Q >1

5

3.3.3

/

3.3-4

	:	: polyoxymethylene	
	$(CH_2O)n$	(30)n	UN 2213
	41533	RTECS -	CAS 30525-89-4
	( ): 120-170	:	
	( ) /	(kPa) /	
	( ) /	(=1): 1.39	
	(MPa) /	(=1) 1.03	
	:		
	( ) 70	(MJ)	
	(V) 7.0-73.0		
	( ) 300		
	LD_{50} 1600 mg/kg( )		
	15 15		

3.3-5

	:	Chlorohydric acid	
	HCl	36.46	UN 1789
	81013	RTECS MW4025000	CAS 7647-01-0
	( ) -114.8		
	( ) 108.6 20%	(kPa) 30.66/21	
	( ) /	(=1) 1.097	
	(MPa) /	(=1) 1.26	
	( ) /	(MJ) /	
	(V) /		
	( ) /		
	,		
	LD_{50} 900mg/kg( ) LC_{50} 3124ppm 1		
	14 2 2-4		
	30 85		

3.3-6

	:	: aminomethane	
	CH_5N	31.10	UN 1061
	21043	RTECS -	CAS 74-89-5
	( ): -93.5	:	
	( ) -6.8	(kPa) 202.65(25)	
	( ) 156.9	(=1): 0.66	
	(MPa):/	(=1) 1.09	
	:		
	( ) /	(MJ) 1059.6	
	(V) 4.9-20.8		
	( ) 430		
	LC_{50} 2400mg/m^3 2 ( )		
	15 15		
	30		

3.3-7

	:	: ethanol	
	C_2H_6O	46.07	UN /
	-	RTECS -	CAS 64-17-5
	( ): -114.1	:	
	( ) 78.3	(kPa) 5.33(19)	
	( ) 243.1	(=1): 0.79	
	(MPa):6.38	(=1) 1.59	
	:	/	
	( ) 12	(MJ) 1365.5	
	(V) 3.3-19		
	( ) 363		
	LD_{50} 7060 mg/kg( ) 7430 mg/kg( ) LC_{50} 37620 mg/m^3 10 ( )		

3.3-8

	:	: dimethylamine	
	CH_5N	45.08	UN 1032
	21044	RTECS -	CAS 124-40-3
	( ): -92.2	:	
	( ) 6.9	(kPa) 202.65(10)	
	( ) 164.5	(=1): 0.68	
	(MPa)5.31	(=1) 1.55	
	:		
	( ) -17.8	(MJ) 1741.8	
	(V) 2.8-14.4		
	( ) 400		
	LC_{50} 8354mg/m^3 6 ( )		
	15 15		
	/ 		
	30		

3.3-9

: : formaldehyde

CH_2O 30.03 UN 1198

83012 RTECS - CAS 50-00-0

( ): -92 :

( ) -19.4 (kPa) 13.33(-57.3)

( ) 137.2 (=1): 0.82

(MPa):6.81 (=1) 1.07

:

( ) 50(37%) (MJ) 2345.0

(V) 7.0-73.0

( ) 430

LD_{50} 800 mg/kg( ) 270 mg/kg( ) LC_{50} 590 mg/m^3( )

15

15

1% 60mL

D ν X

3.3-10

	:	: Sulfur oxychloride	
	SO_2Cl_2	134.97	UN 1834
	-	RTECS -	CAS 7791-25-5
	( ): -54.1	:	
	( ) 69.1	(kPa) 14 00(20)	
	( ) /	(=1): 1.67	
	(MPa):/	(=1) 4.7	
	:/		
	( ) /	(MJ)	
	(V)		
	( ) /		
	( ) 0 ( ) 2		
	LC_{50}:159ppm/4h		
	15 15		
	(SCBA)		

3.3-11

	:	ammonia	
	NH_3	17.03	UN 1005
	23003	RTECS /	CAS 7664-61-7
	( ) -77.7		
	( ) -33.5	(kPa) 506.62/4.7	
	( ) /	(=1) 0.82	
	(MPa) /	(=1) 0.6	
	( ) -54	(MJ) /	
	(V%):15.7-27.4		
	( ) 651		
	LD_{50} 350mg/kg( ) LC_{50} 1390mg/m^3 4 (		
	X X		
	2% 15		
	150		

3.3-12

	:	: Petroleum ether	
	C_5H_{12} C_6H_{14} C_7H_{16}	-	UN 1271
	32002	RTECS -	CAS 8032-32-4
	( ): <-73	:	
	( ) 40-80	(kPa) 53.32(20)	
	( ) /	(=1): 0.64 0.66	
	(MPa) /	(=1) 2.5	
	:		
	( ) <-20	(MJ)	
	(V) 1.1-8.7		
	( ) 280		
	LD_{50} 40 mg/kg( )		
	15		
	)		

3.3-13

	:	: acetone	
	C_3H_6O	58.08	UN 1090
	31025	RTECS -	CAS 67-64-1
	( ): -94.6	:	
	( ) 56.5	(kPa) 53.32(39.5)	
	( ) 235.5	(=1): 0.8	
	(MPa) 4.72	(=1) 2.0	
	:		
	( ) -20	(MJ) 1788.7	
	(V) 2.5-13.0		
	( ) 465		
	LD_{50} 5800 mg/kg( ) 20000 mg/kg( )		

3.3-14

	:	:4-Methylbenzyl cyanid	
	C_9H_9N	131.17	UN 3276 6.1/PG 3
	/	RTECS /	CAS 2947-61-7
	( ):18	: /	
	( ) 242-243	(kPa) /	
	( ) /	(=1):0.992g/mL	
	(MPa) /	(=1) /	
	/	/	
	( ) 106	(MJ) /	
	(V) /	/	/
	( ) /	/	
	, , , , , , ,		
	15 ,		
	, ,		

3.3-15

	:	: dimethyl carbonate	
	$C_3H_6O_3$	90.1	UN 1161
		RTECS	CAS 616-38-6
	( ):0.5	:	
	( ) 90-91	(kPa) 7.38mmHg	
	( ) 274.85	(=1):1.07g/mL	
	(MPa) 4.5	(=1) 3.1	
	( ) 19	(MJ) /	
	(V) /		
	( ) /		
	LD_{50} 13000 mg/kg( ) 6000 mg/kg( ) LC_{50} /		
	29.7g/m^3 2		

3.3-16

	:	: Sodium methoxide	
	CH_3ONa	54.0237	UN 1431
	-	RTECS -	CAS 124-41-4
	( ): -98	:	
	( ) 65	(kPa) 50	
	( ) /	(=1): 1.1	
	(MPa)/	(=1) /	
	:	_____ _____ _____	
	( ) 11	(MJ)	
	(V) /		
	( ) /	/	
	LD_{50}:5628mg/kg 15800mg/kg LC_{50} 83776mg/m 4 : 50mg/m 12 / 3 8-10		
	15 15		
	( )		

3.3-17

	:	: Potassium carbonate	
	K_2CO_3	138.21	UN
	/	RTECS /	CAS 584-08-7
	,		
	( ): 891	:	
	( ) /	(kPa) /	
	( ) /	(=1): 2.43	
	(MPa) /	(=1) /	
	( ) /	(MJ) /	
	(V) /	/	/
	( ) /		
	LD_{50} 1870 mg/kg( )		

3.3-18

	:	: Toluene	
	C_7H_8	92.14	UN 1294
	32052	RTECS /	CAS 108-88-3
	( ): -94.9	:	
	( ) 110.6	(kPa) 4.89	
	( ) 318.6	(=1): 0.87	
	(MPa) 4.11	(=1) 3.14	
	( ) 4	(MJ) /	
	(V) 1.2-7.0	/	/
	( ) 535		
	LD_{50} 5000 mg/kg( ) 12124 mg/kg( ) LC_{50} 20003mg/m^3 8 ( )		
	10		

3.3-19

	:	: cyclopentanone	
	C_5H_8O	84.12	UN 2245
	33590	RTECS -	CAS 120-92-3
	( ): -58.2	:	
	( ) 130.6	(kPa) /	
	( ) /	(=1): 0.95	
	(MPa)/	(=1) 2.3	
	:		
	( ) 26	(MJ)	
	(V) /		
	( ) /		
	LD_{50} 1950 mg/kg( )		
			30

3.3-20

	:	: sodium ethanolate|sodium ethoxide	
	C_2H_5NaO	68.05	UN -
	82018	RTECS -	CAS 141-52-6
	( ): 300	:	
	( ) /	(kPa) /	
	( ) /	(=1): 0.868	
	(MPa)/	(=1) 2.3	
	:		
	( ) /	(MJ)	
	(V) /		
	( ) /		
		15	
		:	
		:	
		(MSHA/NIOSH	
	)		

	US AXBEK EN 14387 EN 166 NIOSH EN 374 US F739 AS/NZS 2161.1

3.3-21

	:	: propanedinitrile	
	$C_3H_2N_2$	66.06	UN 2647
	61630	RTECS -	CAS 109-77-3
	( ): 30.5	:	
	( ) 220	(kPa) 2.67 109	
	( ) /	(=1): 1.05	
	(MPa)/	(=1) /	
	:		
	( ) 112	(MJ)/	
	(V) /	/	/
	( ) /		
	120		
	LD_{50} 60.8mg/kg( ) 5mg/24		
	5% 1 5000 5%		

“ ”

3.3-22

:	: sodium nitrite	
$NaNO_2$	69.01	UN 1500
51525	RTECS -	CAS 120-92-3

( ): 271	:
( ) 320	(kPa) /
( ) /	(=1): 2.7
(MPa) /	(=1) /
:	
( ) /	(MJ)
(V) /	
( ) /	

LD_{50} 85 mg/kg( )

3.3-23

	:	: benzyl cyanide	
	C_8H_7N	117.5	UN 2470
	61641	RTECS -	CAS 140-29-4
	( ): -23.8	:	
	( ) 233.5	(kPa) /	
	( ) /	(=1): 1.02	
	(MPa) 0.13(60)	(=1) /	
	:		
	( ):101	(MJ) 4278.2	
	(V) /		
	( ) /		
	LD_{50} 270 mg/kg( ) 270 mg/kg( ) LC_{50} 430mg/m^3 2 ( )		
	5% 1:5000		

3.3-24

: : Sulfuryl dichloride

Cl_2O_2S 134.97 UN 1834

81035 RTECS / CAS 7791-25-5

( ): -54.1 :

( ) 69.1 (kPa) 13.33 17.8

( ) / (=1): 1.667

(MPa) / (=1) 4.7

: / /

( ):69.1 (MJ) /

(V) / / /

( ) /

LC_{50}:159ppm/4h

3.3-25

	:	: Caustic soda	
	NaOH	40.01	UN 1823
	82001	RTECS -	CAS 1310-73-2
	( ): 318.4	:	
	( ) 1390	(kPa) 0.13	
	( ) -	(=1): 2.12	
	(MPa) -	(=1) -	
	:		
	( ) -	(MJ) -	
	(V) -	-	-
	( ) -		
	, ,		
	/		
	85		

3.3-26

	:	: monochlorobenzene	
	C_6H_5Cl	112.56	UN 1132
	33546	RTECS -	CAS 108-90-7
	( ): -45.2	:	
	( ) 132.2	(kPa) 1.33(20)	
	( ) 359.2	(=1): 1.10	
	(MPa) 4.52	(=1) 3.9	
	:		
	( ) 28	(MJ)	
	(V) 1.3-9.6		
	( ) 590		
	LD_{50} 2290 mg/kg( )		

3.3-27

	:	: stannic chloride	
	$SnCl_4$	260.53	UN 1827
	81053	RTECS -	CAS 7646-78-8
	( ): -33	:	
	( ) 114	(kPa) /	
	( )	(=1): 2.23	
	(MPa)	(=1)	
	:		
	( )	(MJ)	
	(V)		
	( )		
	LD_{50} 99 mg/kg( ) LC_{50} 2300 mg/m^3 10 ( )		
	15 15		

3.3-28

	:	: dichloromethane	
	CH_2Cl_2	84.94	UN 1593
	61552	RTECS -	CAS 75-09-2
	( ): -96.7	:	
	( ) 39.8	(kPa) 30.55(10)	
	( ) 237	(=1): 1.33	
	(MPa) 6.08	(=1) 2.93	
	:		
	( ) /	(MJ)	
	(V) 12-19		
	( ) 615		
	LD_{50} 1600 2000 mg/kg( ) LC_{50} 88000mg/m^3 1/2 ( )		

3.3-29

	:	: acetic acid	
	$C_2H_4O_2$	60.05	UN 2789
	81601	RTECS -	CAS 64-19-7
	( ): 16.7	:	
	( ) 118.1	(kPa) 1.52(20)	
	( ) 321.6	(=1): 1.05	
	(MPa):5.78	(=1) 2.07	
	:		
	( ) 39	(MJ)	
	(V) 4.0-17.0		
	( ) 463		
	LD_{50} 3530 mg/kg( ) 1060 mg/kg( ) LC_{50} 13791mg/m^3 1 ( )		
	15 : 15		

3.3-30

	:	:Sodium bicarbonate	
	$NaHCO_3$	84.01	UN /
	/	RTECS /	CAS 144-55-8
	( ):270	:	
	( ) 851	(kPa) /	
	( ) /	(=1):2.16g/mL	
	(MPa) /	(=1) /	
	( ) /	(MJ) /	
	(V) /		/
	( ) /		
	LD_{50} 4220 mg/kg( ) LC_{50} /		
	50		

3.3-31

	:	: acetic ester	
	$C_4H_8O_2$	88.1	UN 1173
	32127	RTECS -	CAS 141-78-6
	( ): -83.6	:	
	( ) 77.2	(kPa) 13.33(27)	
	( ) 250.1	(=1): 0.9	
	(MPa):3.83	(=1) 3.04	
	:		
	( ) -4	(MJ) 2244.2	
	(V) 2.0-11.5		
	( ) 426		
	LD_{50} 5620 mg/kg( ) 4940 mg/kg( ) LC_{50} 5760mg/m^3 8 ( )		

3.3-32

	:	: tetrahydrofuran	
	C_4H_8O	72.11	UN
	-	RTECS -	CAS 109-99-9
	( ): -108.5	:	
	( ) 65.4	(kPa) 15.20(15)	
	( ) 268	(=1): 0.89	
	(MPa):5.19	(=1) 2.5	
	:		
	( ) -20	(MJ)	
	(V) 1.5-12.4		
	( ) 230		
	LD_{50} 2816 mg/kg( ) LC_{50} 61740mg/m^3 3 ( )		

3.3-33

: : tert-butyl methyl ether

$C_5H_{12}O$ 88.2 UN 2398

32084 RTECS - CAS 1634-04-4

,

( ): -109( ) :

( ) 53-56 (kPa) 31.9(20)

( ) / (=1): 0.76

(MPa) / (=1) 3.1

:

( ) -10 (MJ)

(V) 1.6-15.1

( ) /

LD_{50} 3030 mg/kg( ) >7500 mg/kg( ) LC_{50} 85000mg/m^3 4 ( )

3.3-34

	:	: methanol	
	CH_4O	32.04	UN 1230
	32058	RTECS /	CAS 67-56-1
	( ): -97.8	:	
	( ) 64.8	(kPa) 13.33(21.2)	
	( ) 240	(=1):0.79	
	(MPa) 7.95	(=1) 1.11	
	( ) 11	(MJ) /	
	(V) 5.5-44.0	/	/
	( ) 385		
	LD_{50} 5628 mg/kg( ) 15800 mg/kg( ) LC_{50} 83776mg/m3 4 ( )		
	15 1		
	30		

3.3-35

	:	: ethyl chlorocarbonate	
	$C_3H_5ClO_2$	108.53	UN 1182
	32151	RTECS -	CAS 541-41-3
	( ): -80.6	:	
	( ) 94	(kPa) 7.06(20)	
	( ) /	(=1): 1.14	
	(MPa) /	(=1) 3.74	
	:		
	( ) 16	(MJ)	
	(V) /		
	( ) 500		
	LD_{50} 50 mg/kg( ) 7120 mg/kg( ) LC_{50} 646mg/m^3 1 ( )		
	15 15		
	( )		
	150m		

3.3-36

	:	: N,N-diethylethanamine	
	$C_6H_{15}N$	101.19	UN 1296
	32168	RTECS -	CAS 121-44-8
	( ): -114.8	:	
	( ) 89.5	(kPa) 8.80(20)	
	( ) 259	(=1): 0.7	
	(MPa):3.04	(=1) 3.48	
	:		
	( ) <0	(MJ) 4333.8	
	(V) 1.2-8.0		
	( ) 249		
	LD_{50} 460 mg/kg( ) 570 mg/kg( ) LC_{50} 6000mg/m^3 2 ( )		
	15 15		

3.3-37

	:	: diisopropyl ether	
	$C_6H_{14}O$	102.18	UN 1159
	31027	RTECS -	CAS 108-20-3
	( ): -85.9	:	
	( ) 68.5	(kPa) 16.00(20)	
	( ) 228	(=1): 0.73	
	(MPa) 2.74	(=1) 3.52	
	:		
	( ) -12	(MJ) 4006.3	
	(V) 1.0-21.0		
	( ) 442		
	LD_{50} 8470 mg/kg( ) 20000 mg/kg( ) LC_{50} 162000 mg/m^3( )		

3.3-38

	:	: methyl cyanide	
	C_2H_3N	41.05	UN 1648
	32159	RTECS -	CAS 75-05-8
	( ): -45.7	:	
	( ) 81.1	(kPa) 13.33(27)	
	( ) 274.7	(=1): 0.79	
	(MPa):4.83	(=1) 1.42	
	:		
	( ) 2	(MJ) 1264.0	
	(V) 3.0-16.0		
	( ) 524		
	LD_{50} 2730 mg/kg( ) 1250 mg/kg(LC_{50} 12663mg/m^3 8 ( )		
	1:5000		

3.3-39

	:	: hydrofluoric acid	
	HF	20.01	UN 1790
	81016	RTECS -	CAS 7664-39-3
	40%		
	( ): -83.1	:	
	( ) 120(35.3%)	(kPa) /	
	( ) /	(=1): 1.26(75%)	
	(MPa) /	(=1) 1.27	
	:		
	( ) /	(MJ)	
	(V)		
	( )		
	LC50 1044 mg/m^3( ) 33-41mg/m 20mg/m 1-5.5 TCL0 :4980μg/m /4 1-22		
	15 15 ,		

3.3-40

	:	: sodium borohydride	
	$NaBH_4$	37.85	UN 1426
	43044	RTECS -	CAS 16940-66-2
	( ): 36	:	
	( ) 400( )	(kPa) /	
	( ) /	(=1): 1.07	
	(MPa) /	(=1) /	
	:		
	( ) /	(MJ)	
	(V) /		
	( ) /		
	LD_{50} 18 mg/kg( )		
	15		
	25 75		

3.3-41

	:	: sodium hydride	
	NaH	24.0	UN 1427
	43017	RTECS -	CAS 7647-69-7
	25-50%		
	( ): 800( )	:	
	( )	(kPa) /	
	( ) /	(=1): 0.92	
	(MPa)/	(=1) /	
	:		
	( ) /	(MJ)	
	(V) /		
	( ) /		
	,		
	15 15		
	1211		
	25 75		

3.3-42

	:	: hydrogen peroxide	
	H_2O_2	34.01	UN 2014 5.1/PG2
		RTECS	CAS 7722-84-1
	( ):-0.43	:	
	( ) 158	(kPa) 1.48mmHg	
	( ) /	(=1):1.13g/mL	
	(MPa) /	(=1) /	
	/	/	
	( ) 107	(MJ) /	
	(V)	/	/
	( )		
	69%		
	LD_{50} 4060mg/kg	LC_{50} 2000mg/m^3 4	
	15		

3.3-43

	:	: sulfuric acid	
	H_2SO_4	98.08	UN -
	81007	RTECS -	CAS 7664-93-9
	( ):3-10	:	
	( ) 315-338	(kPa) 0.13 145.8	
	( ) /	(=1):1.6-1.84	
	(MPa) /	(=1) 3.4	
	/		
	( ) /	(MJ) /	
	(V) /		
	( ) /		
	,		
	LD_{50} 2140mg/kg( ) LC_{50} 510mg/m3 2 320mg/m^3 2 1380μg 110 190mg/kg 115mg/kg		
	20 30 10 15		

	( )
	(CaO) ($CaCO_3$) ($NaHCO_3$)

3.3-44

	:	Marsh gas	
	CH_4	16.04	UN 1971
	21007	RTECS	CAS 74-82-8
	( ) -182.5		
	( ) -161.5	(kPa) 53.32(-168.8)	
	( ) -82.6	(=1) 0.42(-164)	
	(MPa) 4.59	(=1) 0.55	
	( ) -188	(MJ) 889.5	
	(V) 5.3-15	/	/
	( ) 538		
	/		
	25 30		
	30		

3.3-45

	(CAS)			
4-	$C_4H_6N_2$ 822-36-3	82.1 54-56 263 157 1.02-1.06g/ml	LD50 370mg/kg LD50 751mg/kg LD50 165mg/kg	/
	C_2H_8ClNS 156-57-0	, 113.6 66-70	LD50( ) 231.9 mg/kg	/
	$C_3H_6OS_2$ 868-84-8	122.21 169 52-55 144		
	$C_{10}H_{18}N_2OS$ 871-76-1	214.33 241.9 ° C at 760 mmHg 100.1 0.035mmHg at 25 ° C	/	/
	$C_5H_6O_2$ 98-00-0	98.1 170 170 149	- LD50: 177 / ; - LD50: 160 /	;
	$C_6H_{16}AlNaO_4$ 22722-98-1		/	

	(CAS)			
		202.16 4&ordm 1.036 / @20oC		
N4-	$C_{11}H_9N_3O_2$ 26661-13-2	215.2081 >300 1.33g/cm^3	/	
	$[(CH_3)_2Si]_2NH$	161.40 25 126 0.77	/	: ;
	CH_3-OH HCl	( ) : : 20-35%	/	/
	$C_2H_6O.HCl$	(KJ/mol) : 727. 0 12 463 [V/V] 44. 0 [V/V] 5. 5 Kpa 13. 33(21. 2) -97.8 kJ/mol :727.0 (1) 0.92 240 74 1013Mbar 6.38	LD $_{50}$ 900mg/kg( ) LC_{50} 3124ppm 1	

	(CAS)			
	C_6HF_5O 771-61-9	184.06 35 143 72 1.757	LD_{50}283mg/kg LD_{50}322mg/kg	:
	$C_6H_5Cl_2O_2P$ 770-12-7	210.98 3 (lit.) 241~243 (lit.) 1.412 g/mL at 25 (lit.) >11 20/4 1.399	/	
L-	$C_6H_{13}NO_2$ 39825-33-7	: 131.173	/	/
	C_4H_9ClMg 677-22-5	116.8723 34 0.931 g/mL at 25 ° C	/	
	C_4H_9Li 109-72-8	64.06 60-80 -95 -21 0.765(25)	/	, . (.)
	$C_{15}H_{14}O_3$	242.27	/	

	(CAS)			
		104-107 386.8 at 760 mmHg 163 1.204g/cm^3		
	-		/	
	$C_5H_{13}BO$/7397-46-8	99.96710 0.868g/ml 25 88-89 20	/	/
9030-01 (2R)-2- -2- -2- -D- y - 3,5-	$C_{20}H_{17}FO_6$	:372.34378 - 133 1.33	/	
	$C_{19}H_{19}BrP$ 1779-49-3	358.2314 >240 230-233 400g/L(25 C)	/	/
	$C_{19}H_{14}FNO$ 121660-37-5	2- -4-(4-) -3- 291.32	/	
MeBEt2	$C_5H_{13}BO$ 7397-46-8	99.9671 0.868 g/mL 25 20 °F	/	
	$CaCl_2$ 10043-52-4	110.99 2.152(25/4)	LD50 1000mg kg( )	

	(CAS)			
		772 1600		
	$C_{10}H_{16}N_6S$ 51481-61-9	141-143 252.34	LD50 5.0g/kg LD50 2.6g/kg	/
	$C_{13}H_{22}N_4O_3S$ 66357-35-5	314.4 69-70 437.1 C at 760 mmHg	/	/
	$C_8H_{15}N_7O_2S_3$ 76824-35-6	337.45 163-164 ° C 354.4 C	LD50>8g/kg	/
	$C_{10}H_{18}N_2OS$ 871-76-1	214.33 1.037g/cm3 241.9 ° C at 760 mmHg 100.1 ° C	/	/
	$H_4N_2O_2S$/7803-58-9	96.109 1.611 89-93	/	
	$C_{15}H_{17}NaO_3$	268.2834	/	/

(CAS)	

80382-23-6

253.27

$C_{12}H_{11}N_7$

396-01-0

3.4

3.4.1

3.4.1.1

H_2

1.

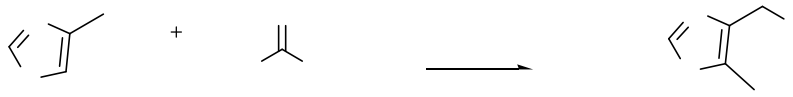

4- 5- -4-

5- -4- 一

2

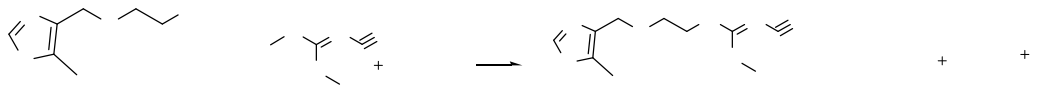

一 二 二

3

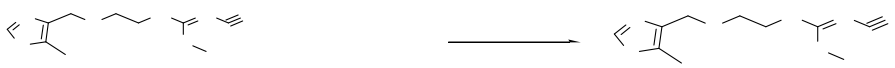

3.4-1

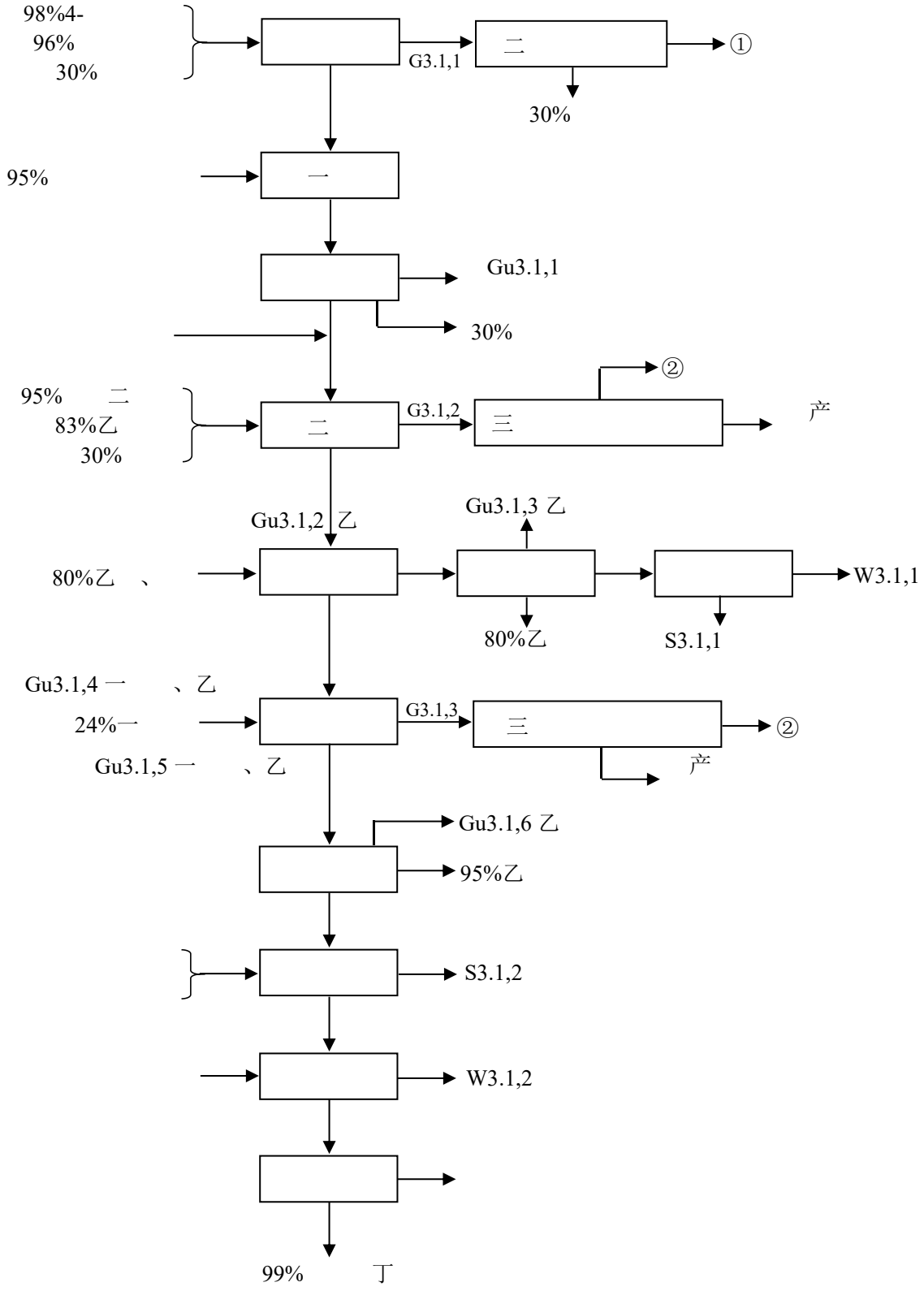
98%4-
96%
30%
二
①
G3.1,1
30%
95%
一
Gu3.1,1
30%
②
95% 二
83%乙
30%
二
G3.1,2
三
产
Gu3.1,3 乙
Gu3.1,2 乙
80%乙 、
W3.1,1
80%乙
S3.1,1
Gu3.1,4 一 、乙
24%一
G3.1,3
三
②
Gu3.1,5 一 、乙
产
Gu3.1,6 乙
95%乙
S3.1,2
W3.1,2
99% 丁

3.4-1

3.4.1.2

H2

5 8

1.

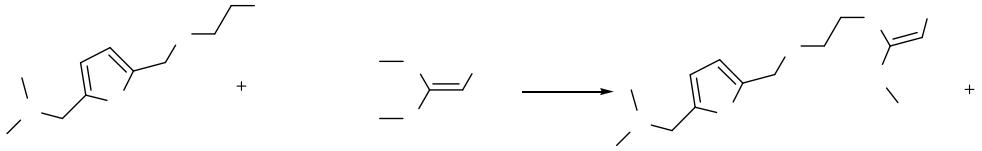

乙 三 丁

2

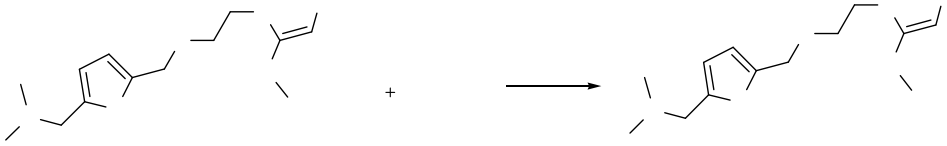

丁 丁

3

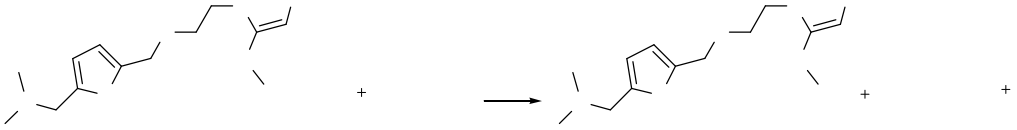

丁 丁

3.4-2

1

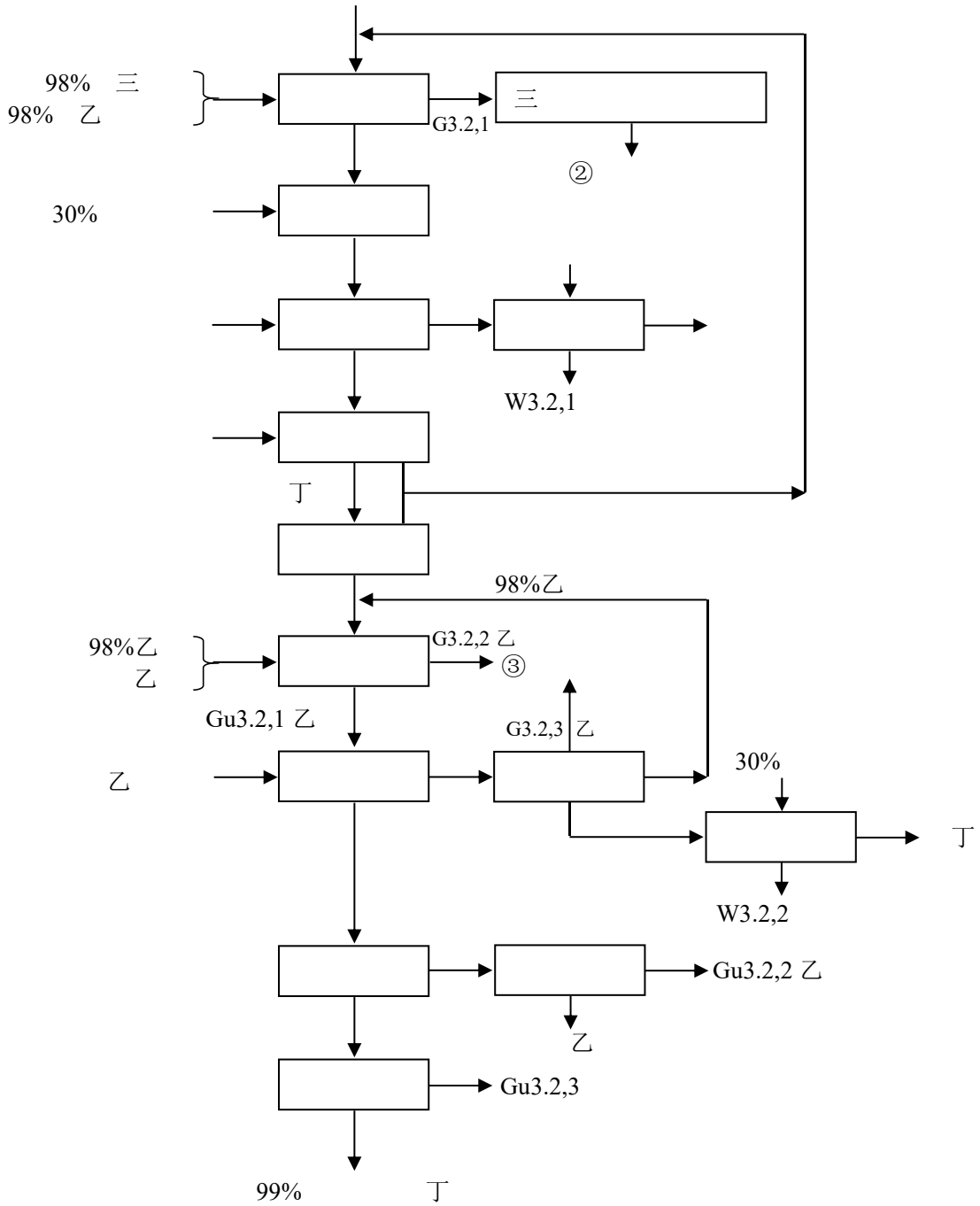
98% 三
98% 乙
三
G3.2,1
②
30%
W3.2,1
丁
98%乙
G3.2,2 乙
98%乙
乙
③
Gu3.2,1 乙
G3.2,3 乙
乙
30%
丁
W3.2,2
Gu3.2,2 乙
乙
Gu3.2,3
99% 丁

2

3.4-2

3.4.1.3

H2

38

50 100 4 7

7

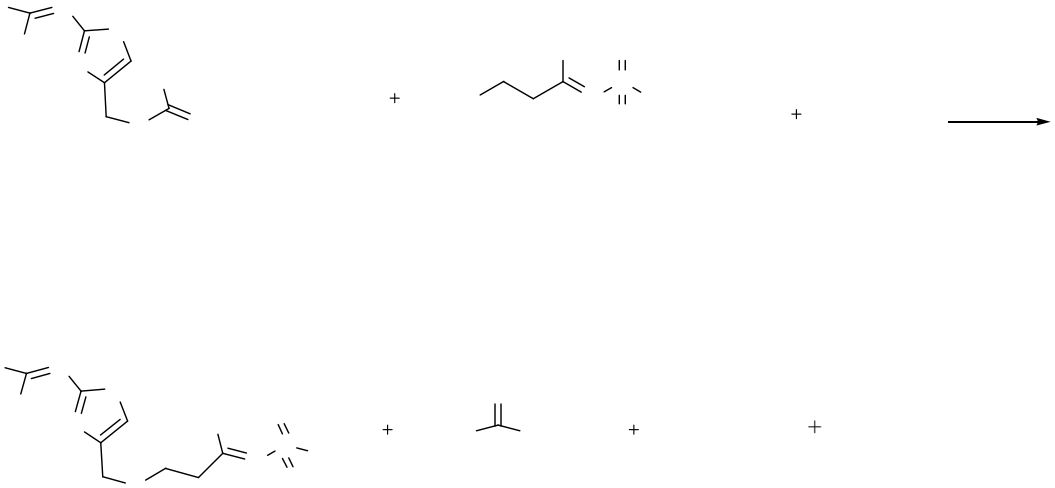

丁

3.4-3

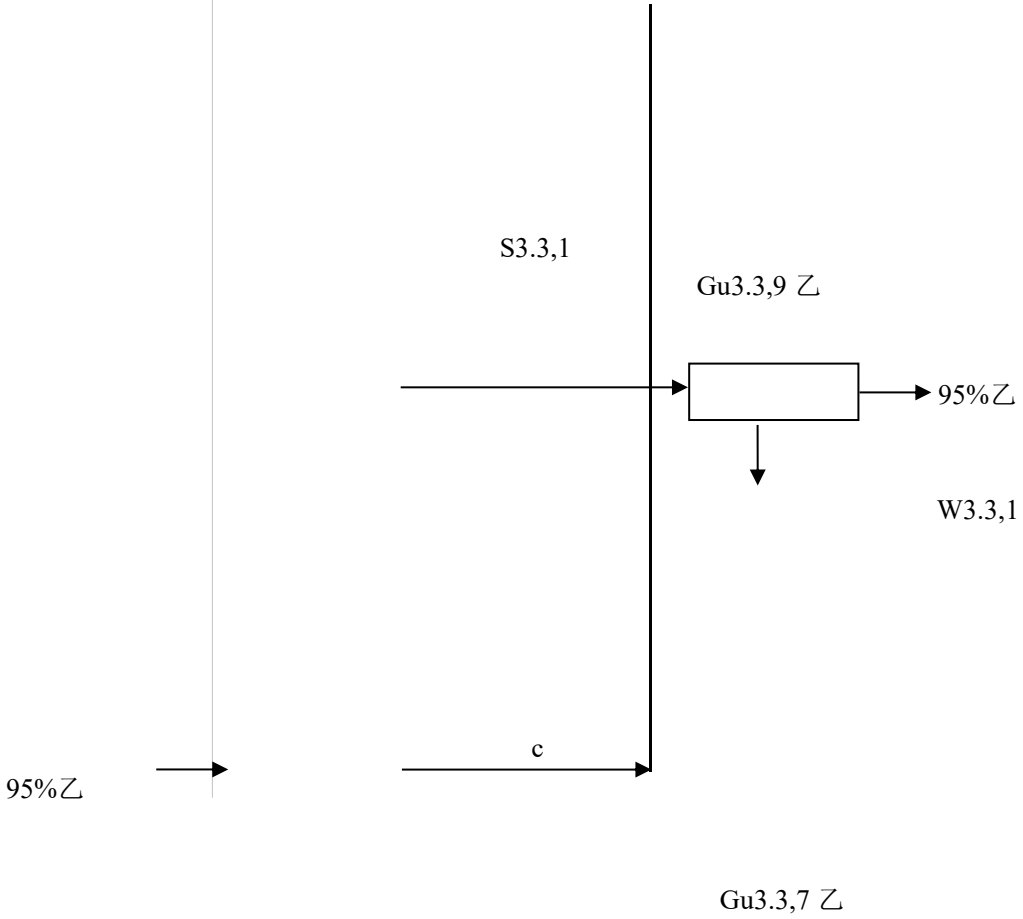

Gu3.3,8

3.4-3

3.4.1.4

1

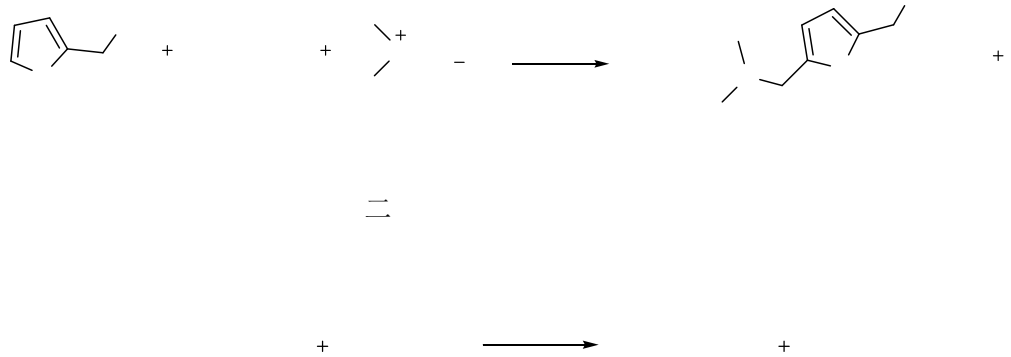

二

2

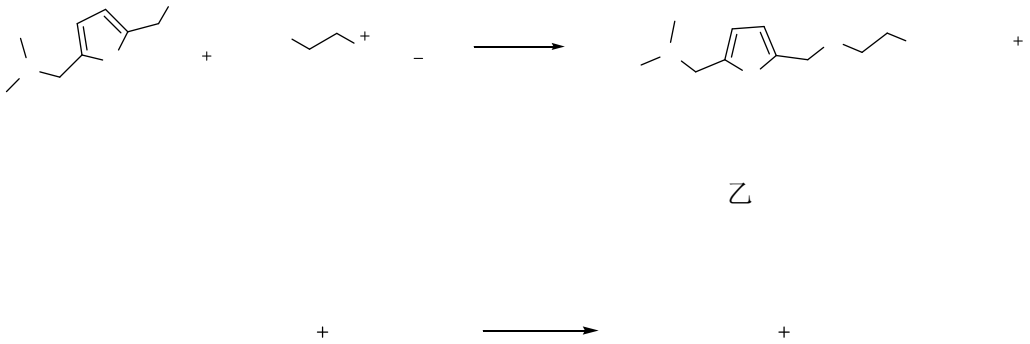

乙

3.4-4

1

2

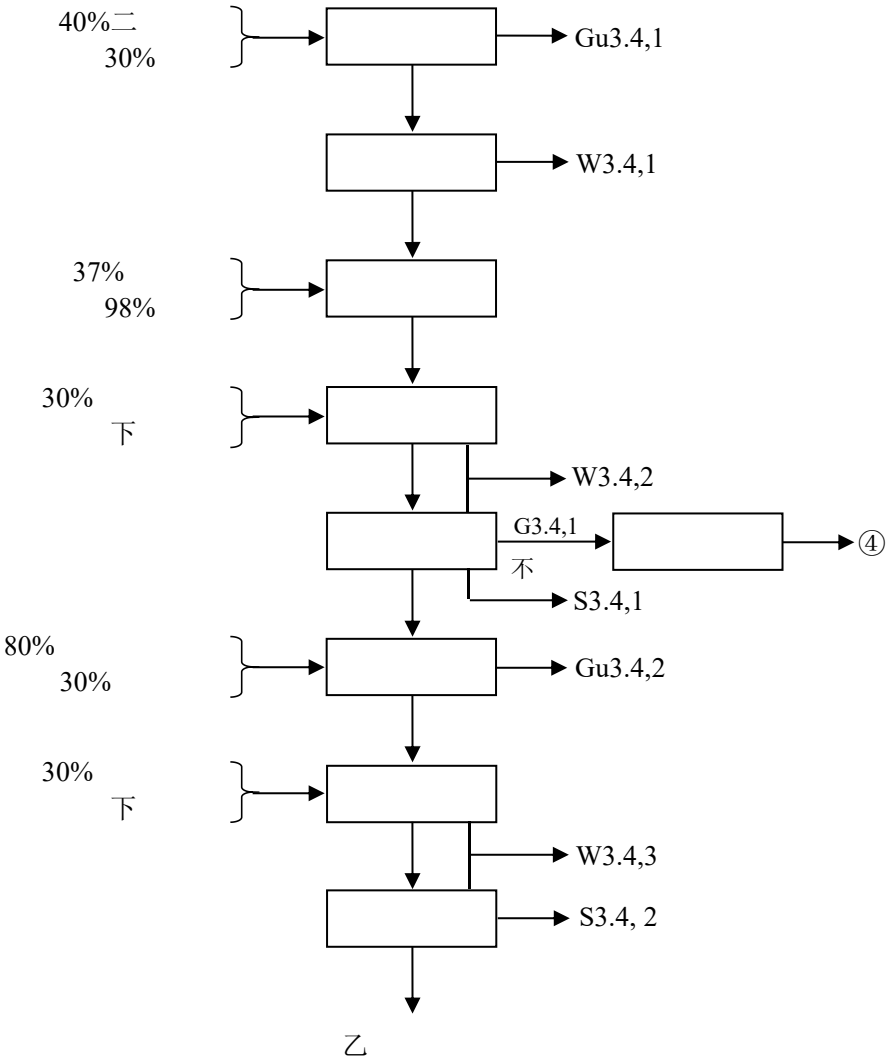
40%二
30%
Gu3.4,1
W3.4,1
37%
98%
30%
下
W3.4,2
G3.4,1
④
不
S3.4,1
80%
30%
Gu3.4,2
30%
下
W3.4,3
S3.4, 2
乙

3.4-4

3.4.1.5

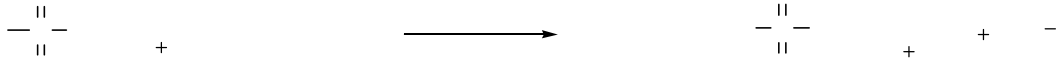

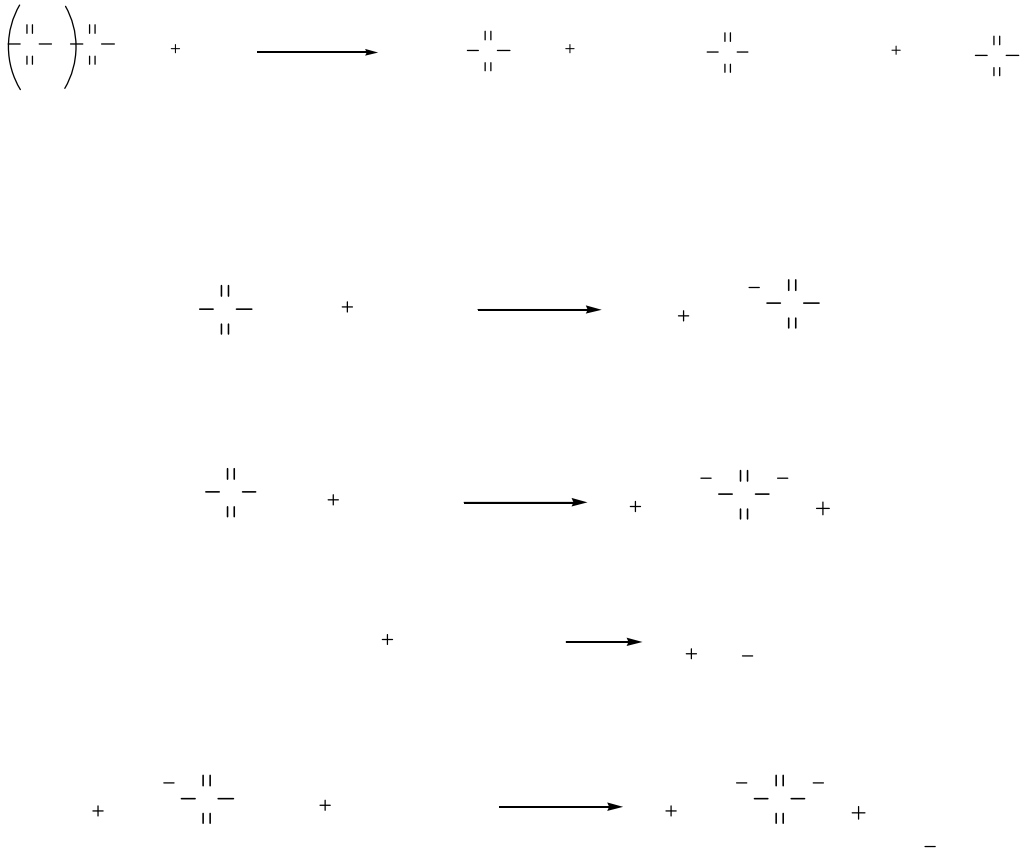

3.4-5

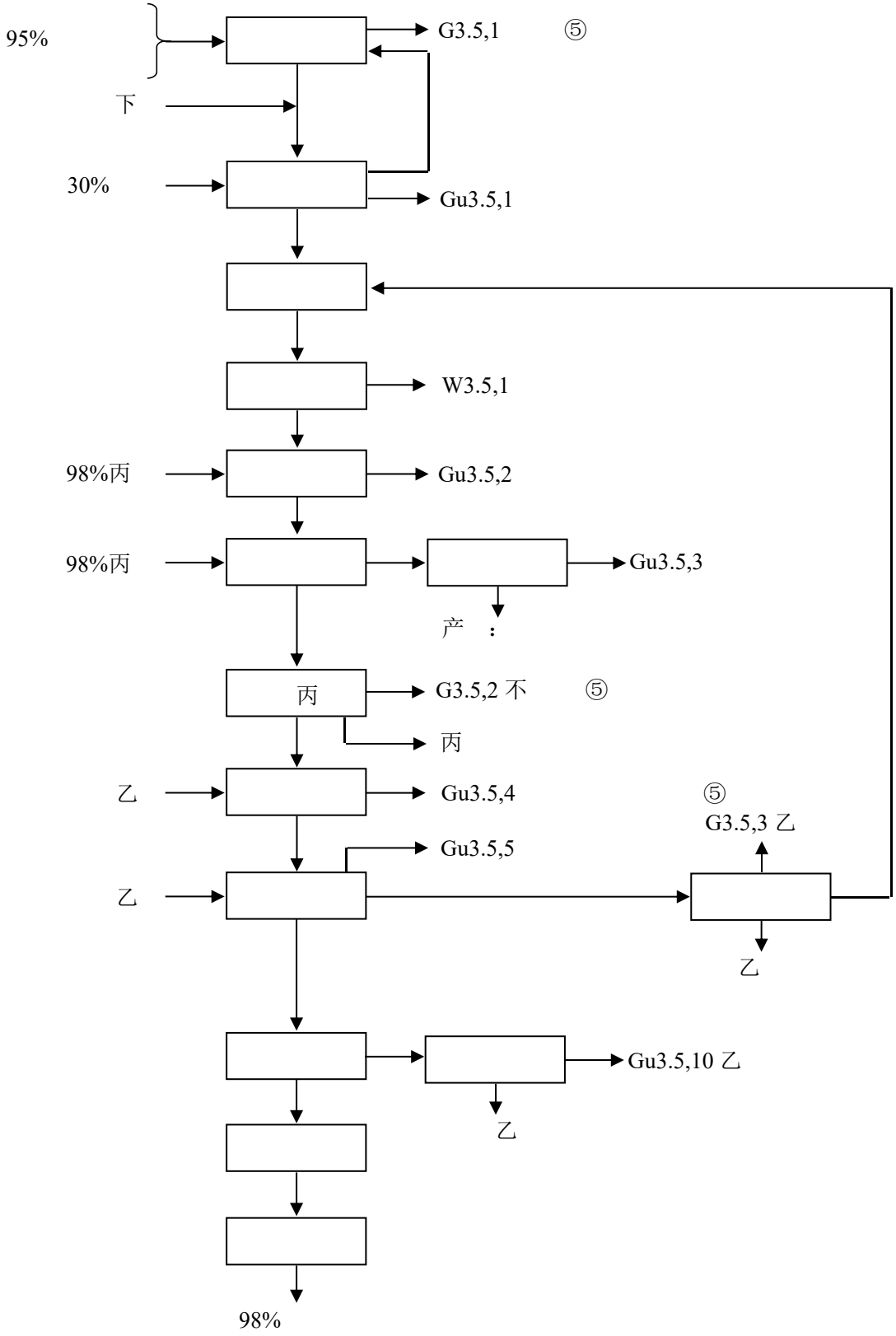
95%
G3.5,1
⑤
下
30%
Gu3.5,1
W3.5,1
98%丙
Gu3.5,2
98%丙
Gu3.5,3
产 :
丙
G3.5,2 不
⑤
丙
乙
Gu3.5,4
⑤
G3.5,3 乙
Gu3.5,5
乙
乙
Gu3.5,10 乙
乙
98%

3.4-5

3.4.1.6

1

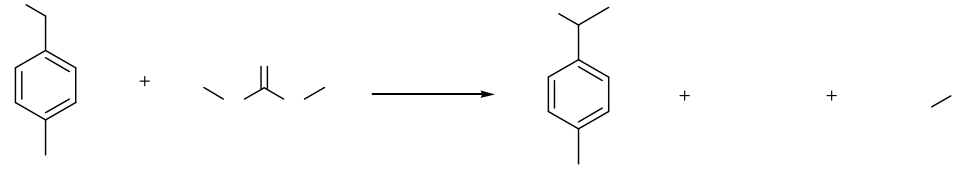

2-

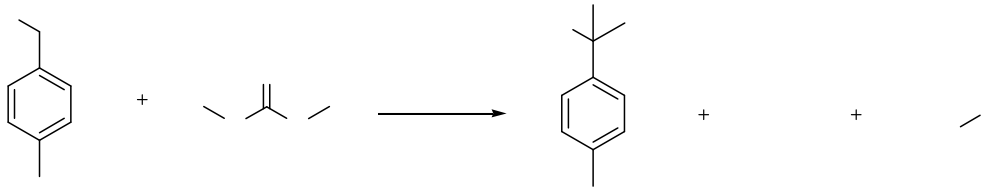

2- -2-

2

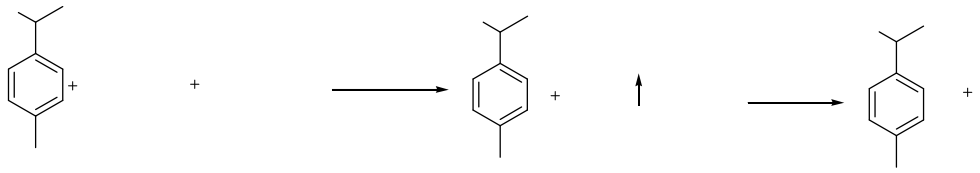

2- 2-

3

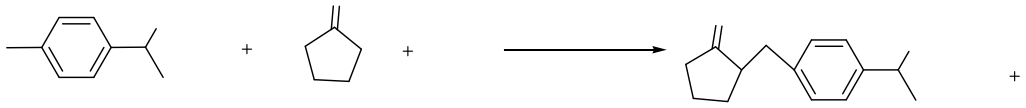

2-

+ +

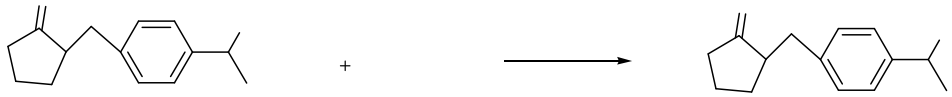

1

160 200 1.0 1.8MPa,
20 1.5% 100
2-

96.5%
2
1 2-
3h 30
PH2 3 2-

96%
3
2- 164.2kg 1eq 1000kg
50kg 60% 1.25eq
84.12kg 1eq
3h 0.5h

20 300kg 1h
80 290kg

96%

3.4-6

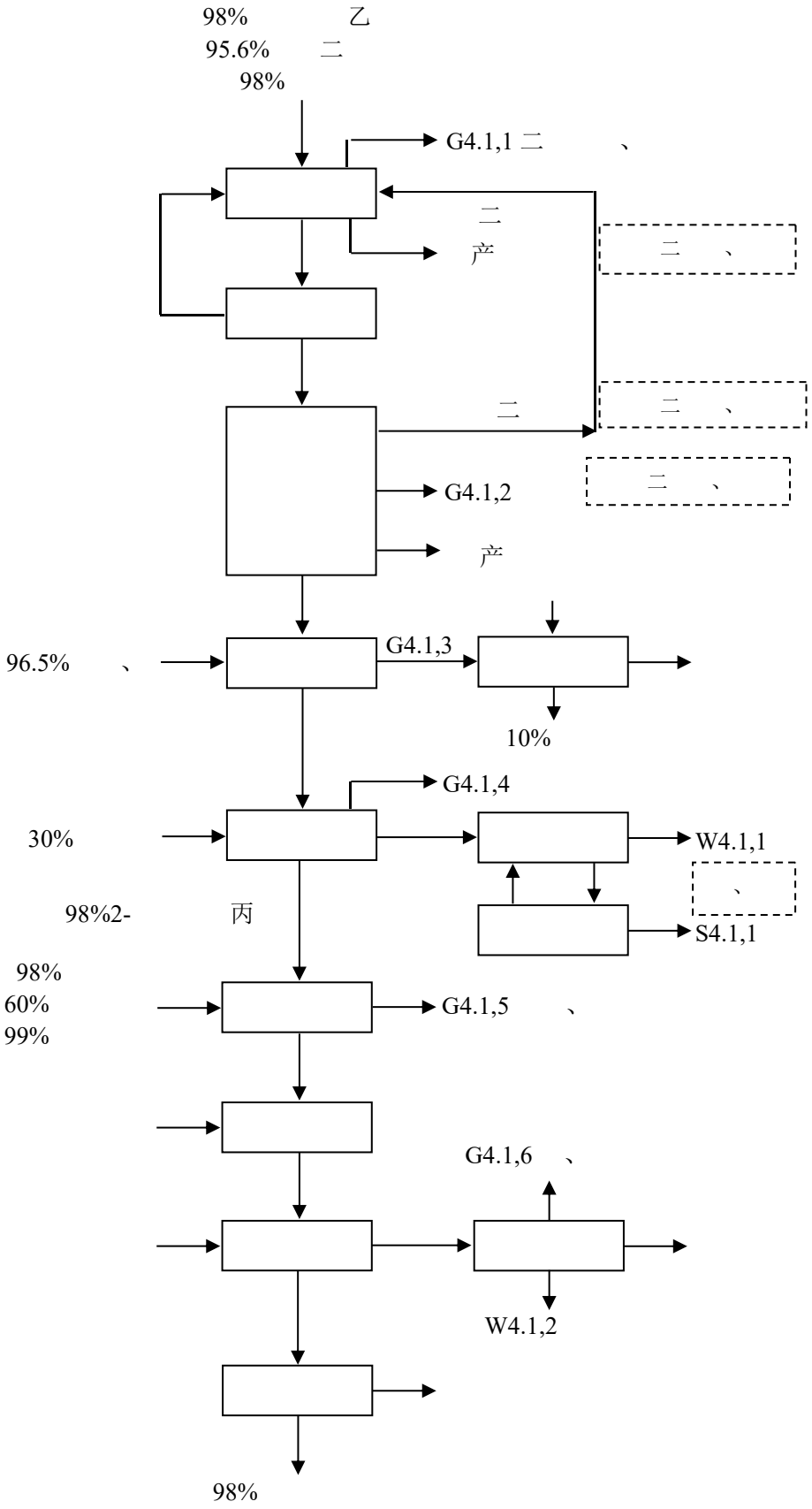
98% 乙
95.6% 二
98%
G4.1,1 二 、
二
产
二 、
二
二 、
G4.1,2
二 、
产
96.5% 、
G4.1,3
10%
G4.1,4
30%
W4.1,1
、
98%2- 丙
S4.1,1
98%
60%
99%
G4.1,5 、
G4.1,6 、
W4.1,2
98%

3.4-6

3.4.1.7

1 1

2

1 1

$CN\text{-}CH_2\text{-}CN + HN{=}C(NH_2)_2HNO_3 + C_2H_5ONa \longrightarrow$

66.06 122.09 68.05
丙二 乙

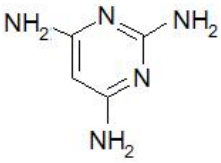

$+ NaNO_3 + C_2H_5OH$

125.13 85 46
1 乙

2

$\longrightarrow$

$+ NaCl + H_2O$

125.13 69.00 36.46 154.13 58.44 18.03
1 亚 亚

3 2

$\longrightarrow$

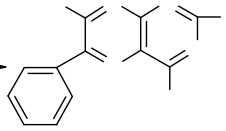

$+ H_2O$

154.13 253.2 18.03
亚 乙

$H_2O + CH_3CH_2ONa \longrightarrow CH_3CH_2OH + NaOH$

18.03 68.05 46 40
乙 乙

1 1

10

1

94%

2

1 1

20 PH4-5 1

98%

3

1h

5

20

2 95%

3.4-7

1 1

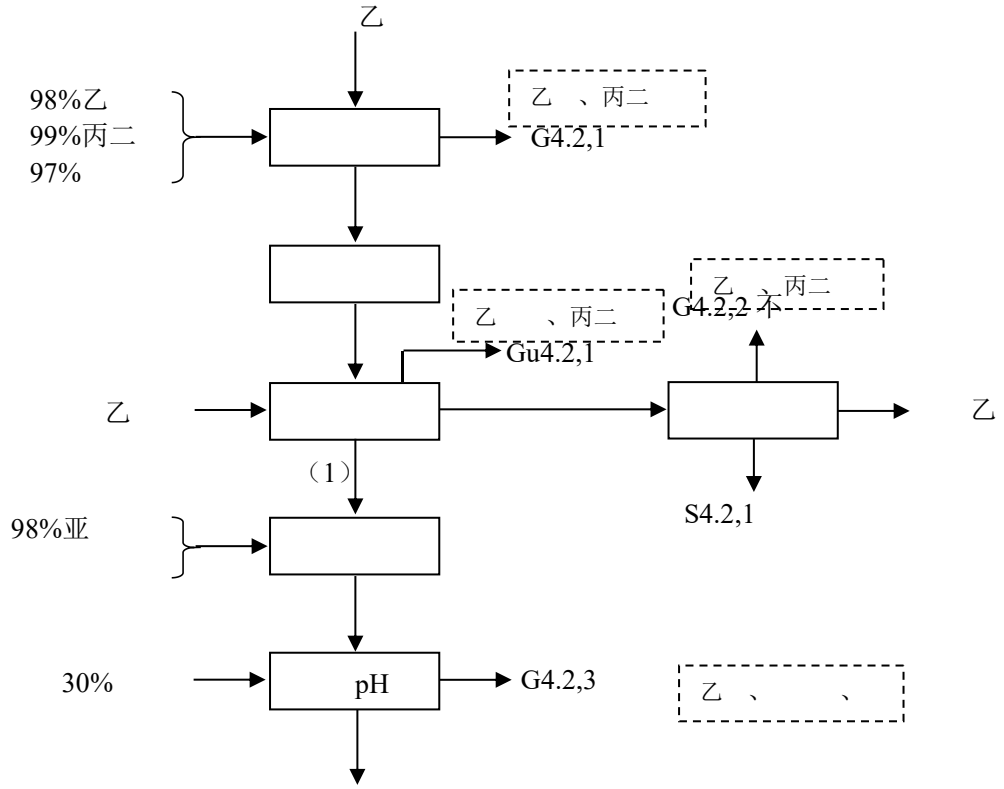

2

3

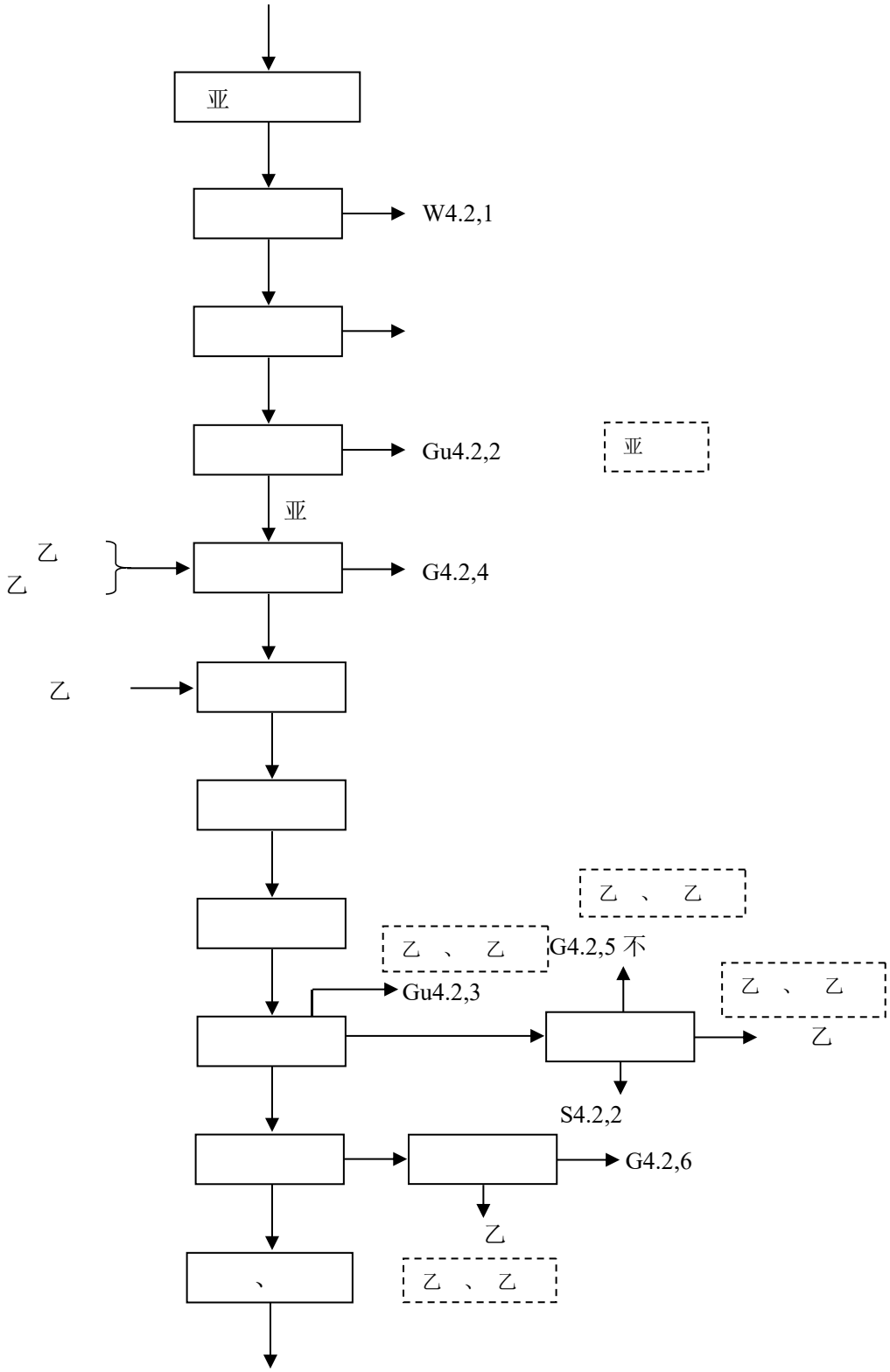

3.4-7

G Gu W S

3.4.1.8

1 9030-211 Bz

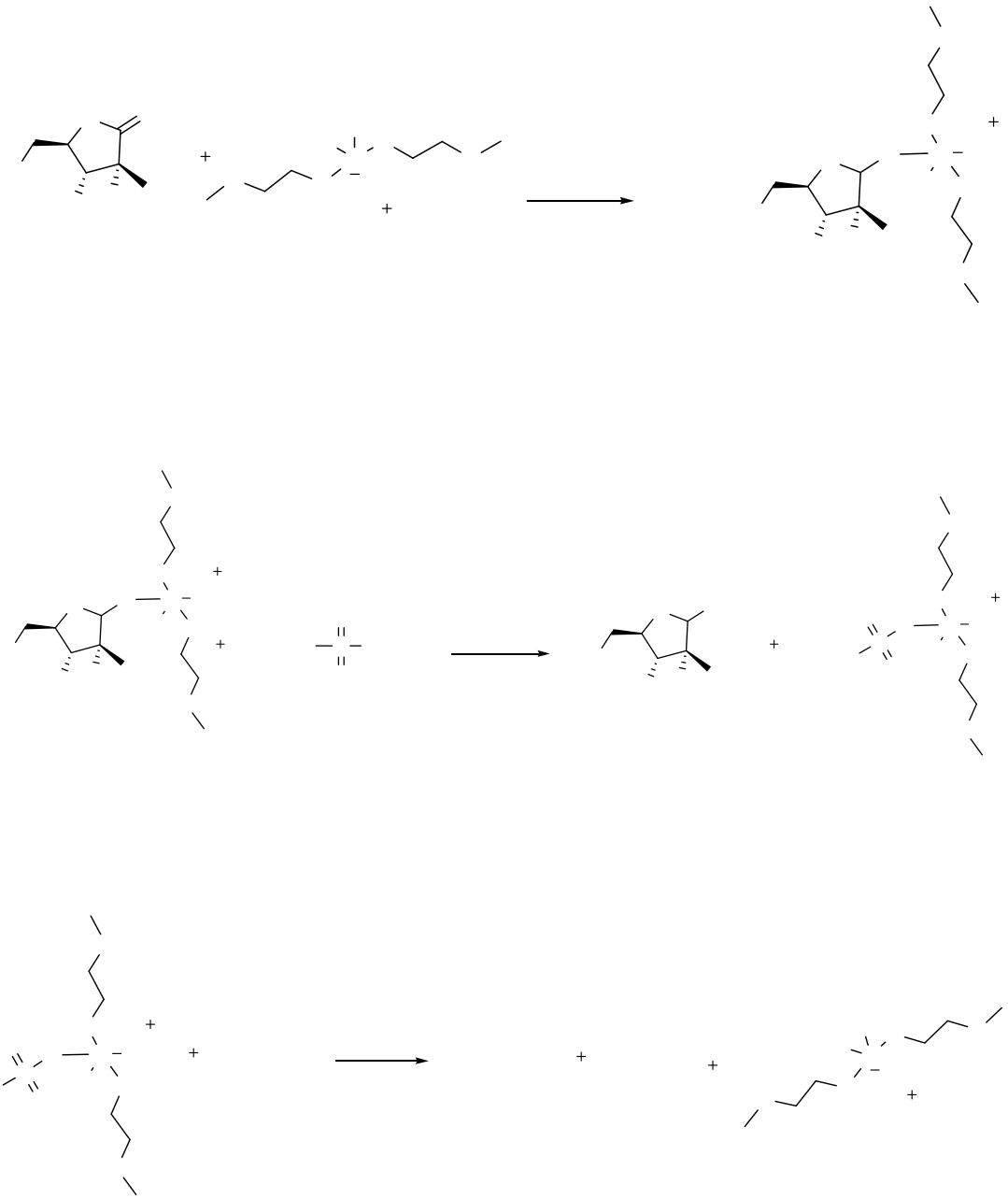

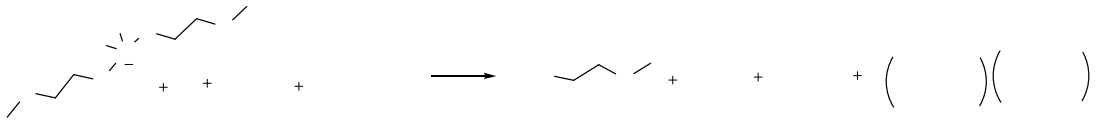

2 9030-212

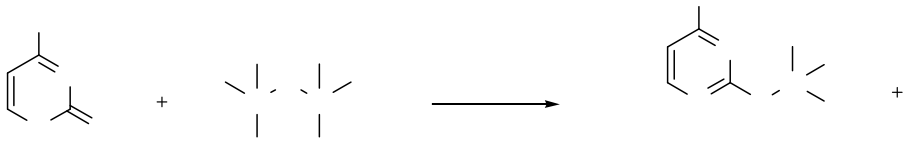

3 9030-02

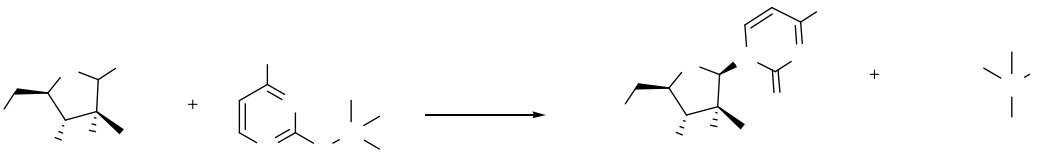

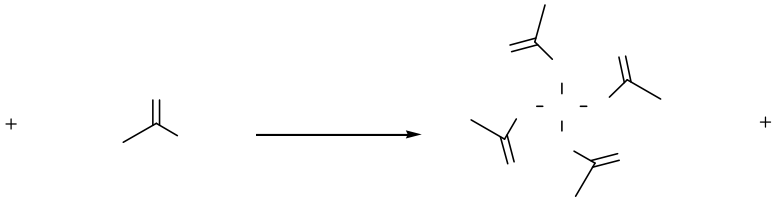

7 9030-06

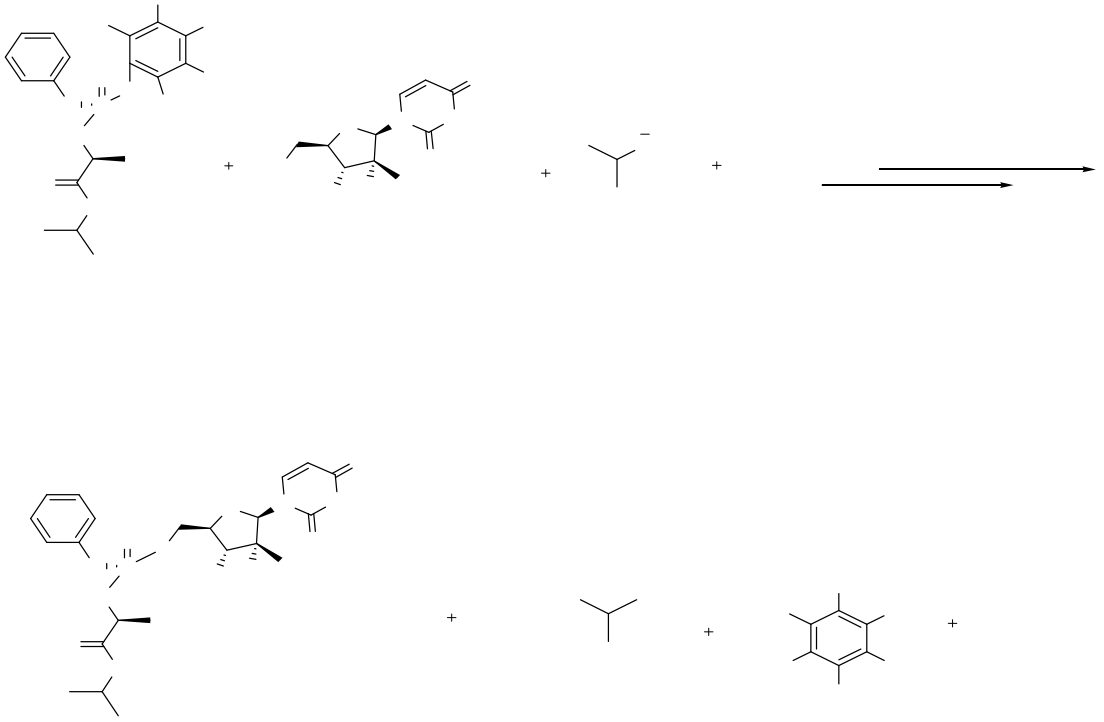

1 9030-211

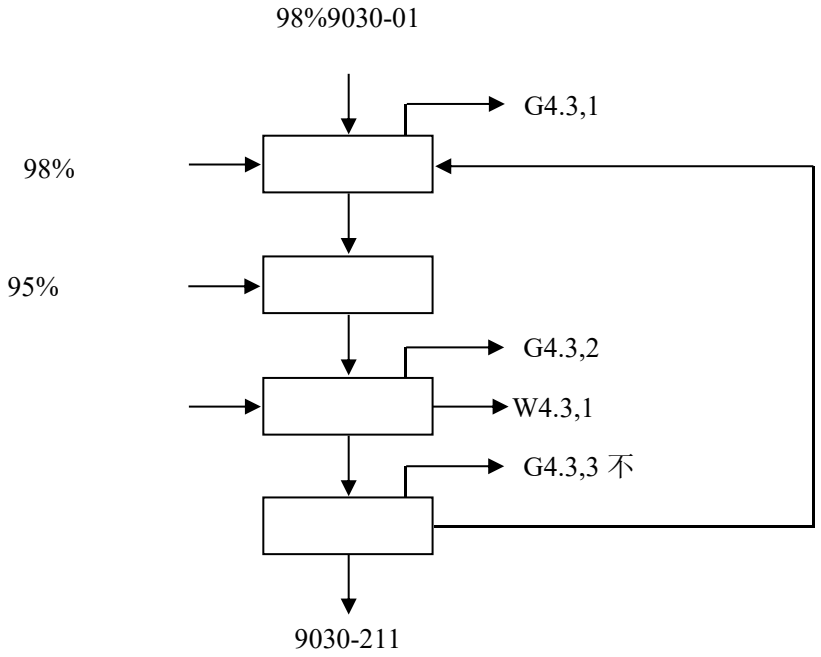

2 9030-212

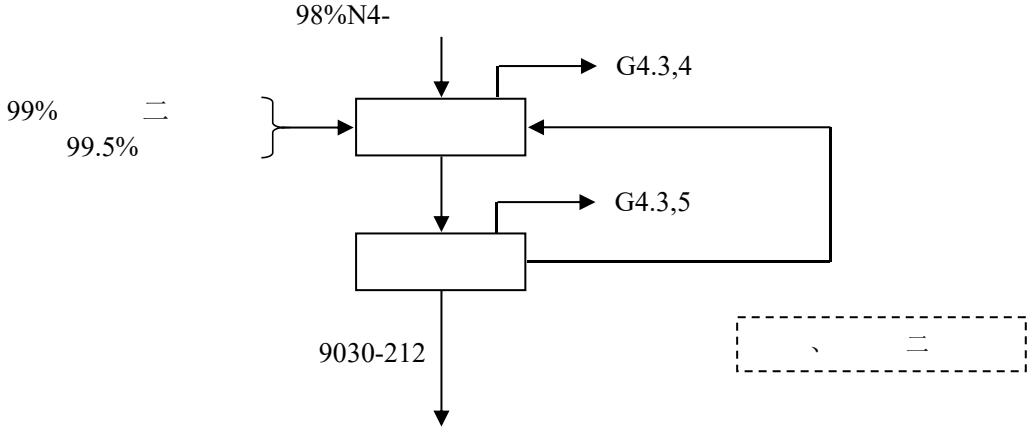

3 9030-02

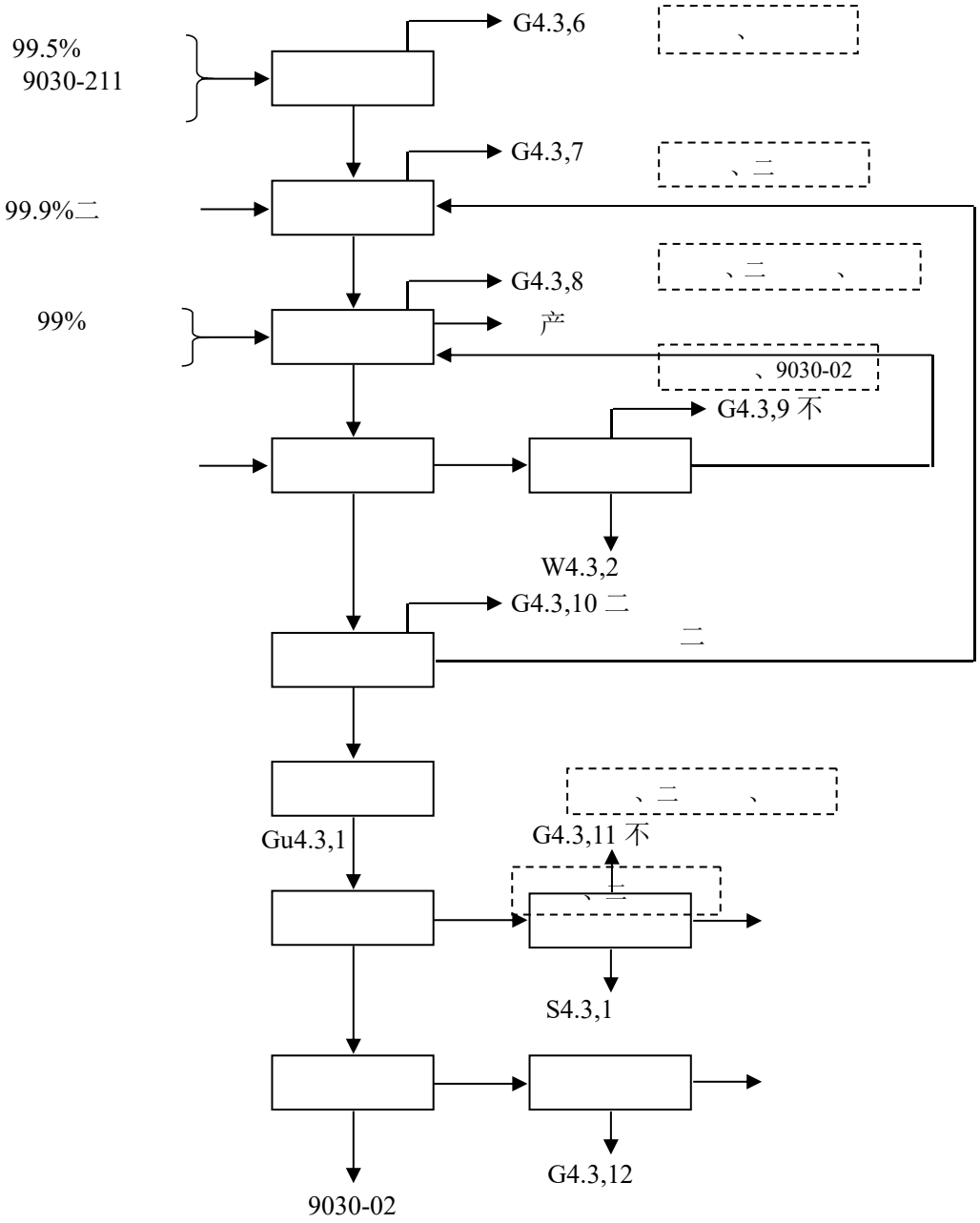
99.5%
9030-211
G4.3,6
、
99.9%二
G4.3,7
、二
99%
G4.3,8
产
、二 、
、9030-02
G4.3,9 不
W4.3,2
G4.3,10 二
二
Gu4.3,1
、二 、
G4.3,11 不
上
、二
S4.3,1
G4.3,12
9030-02

4 9030-04

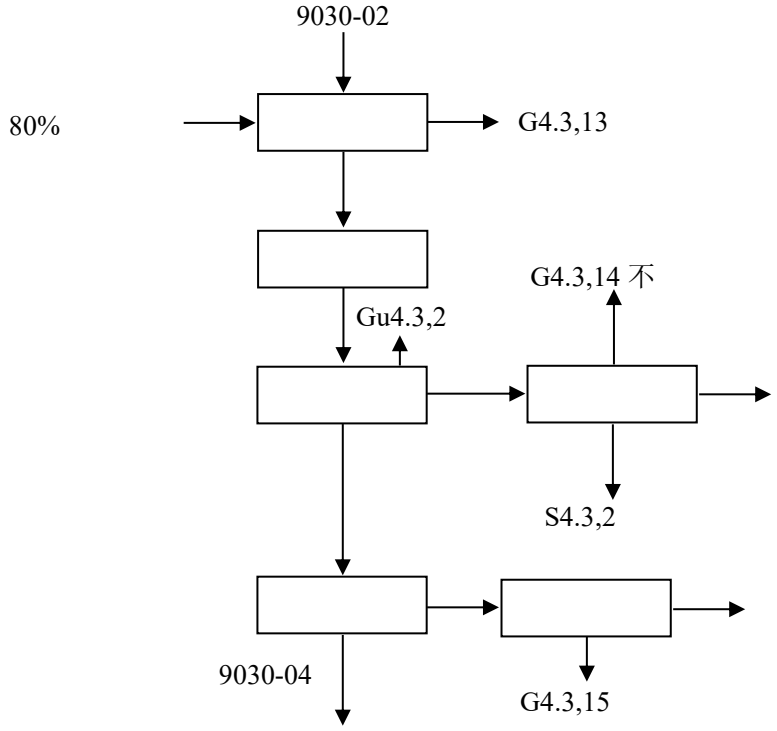

5 9030-03

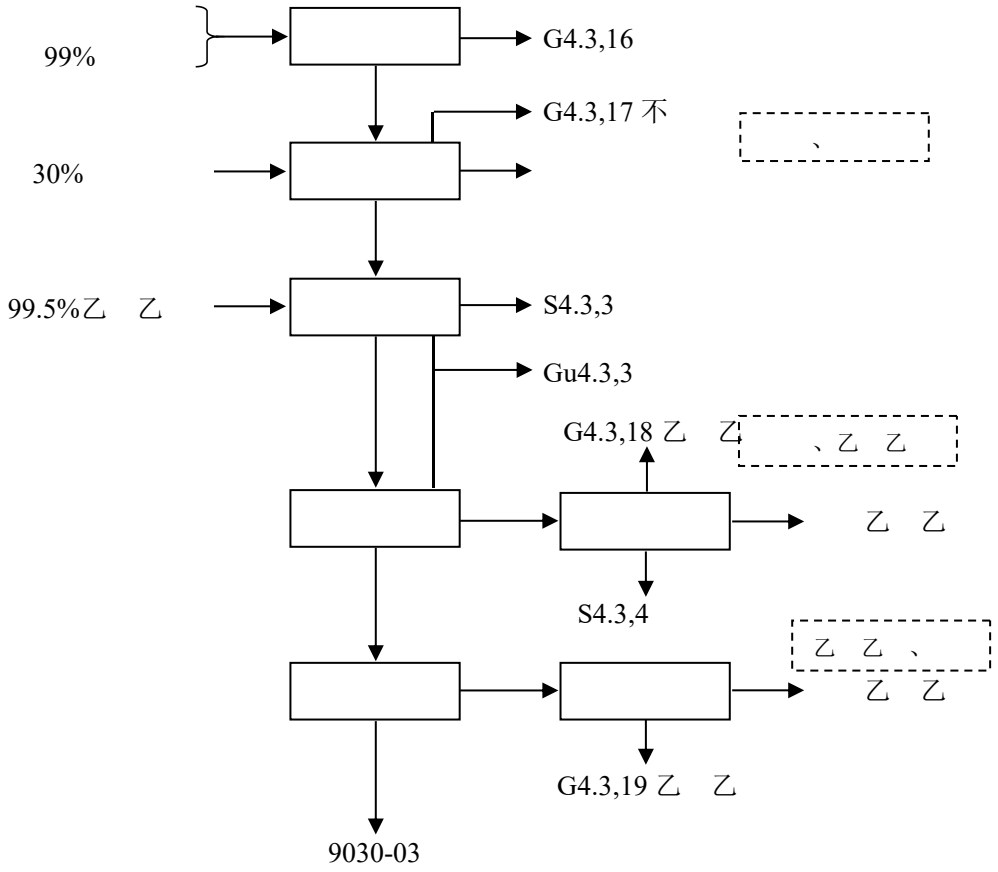

6 9030-05

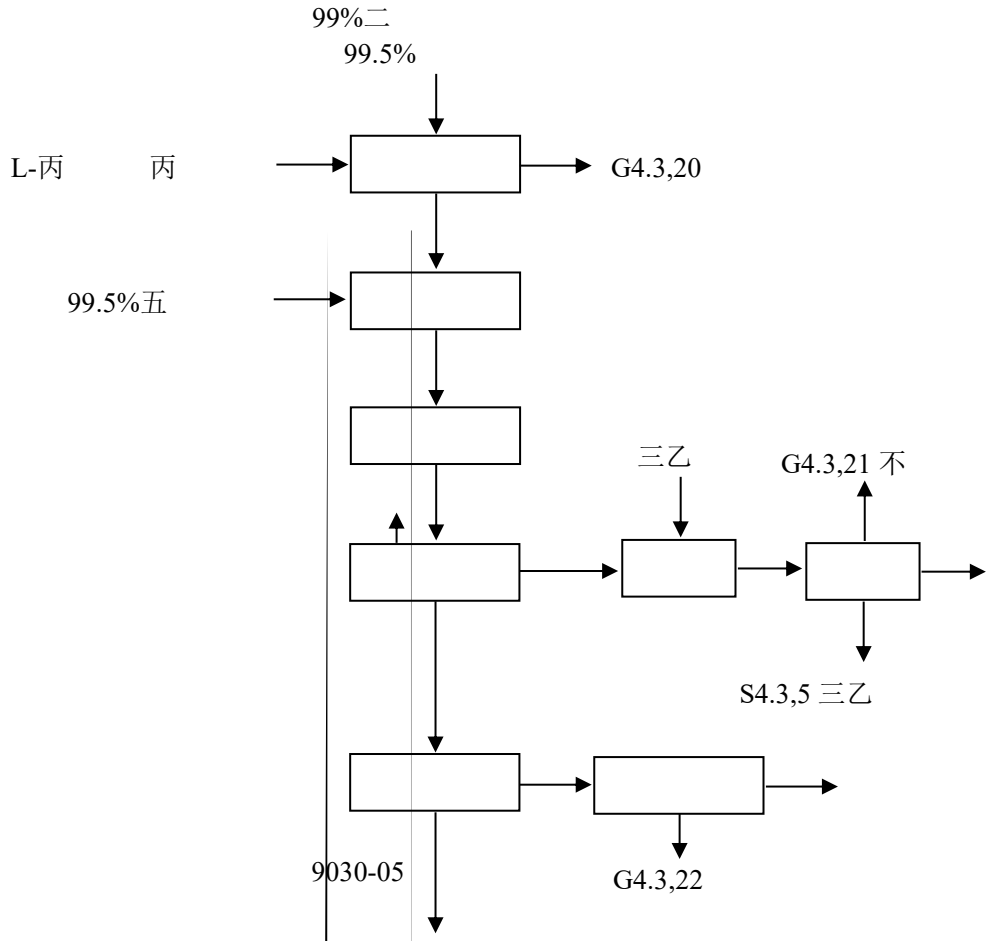

7 9030-06

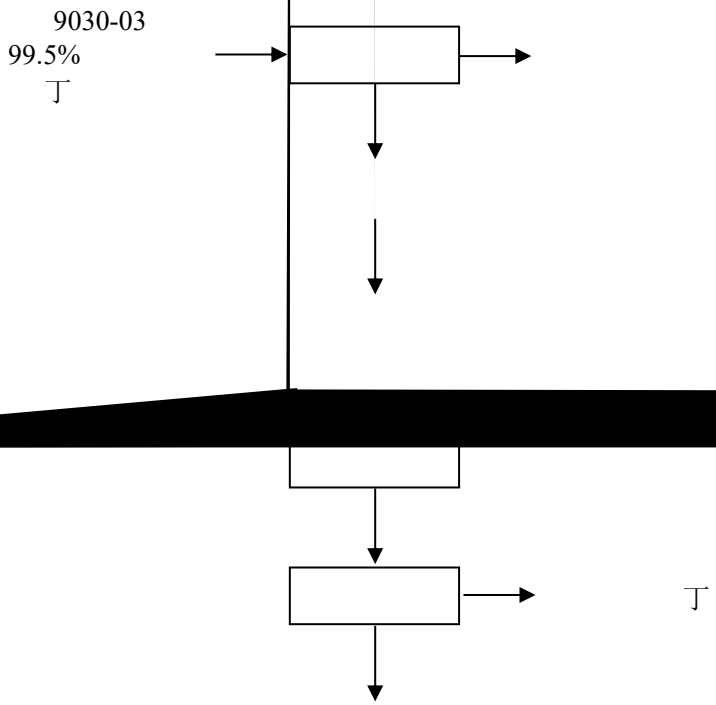

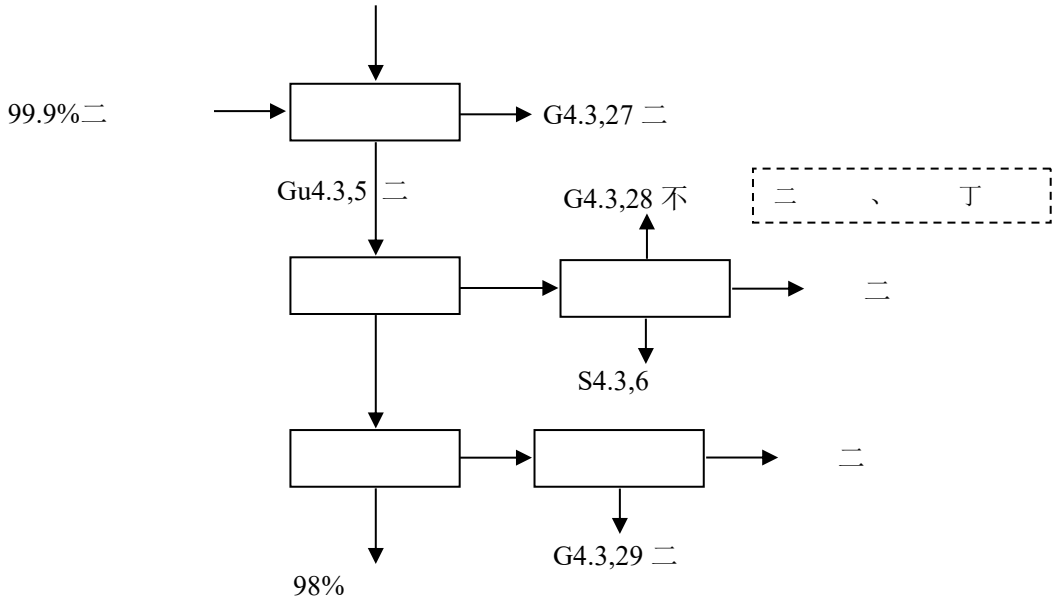

3.4-9

G Gu W S

1 9030-211

9030-01 0

20

90 0.08MPa

9030-211

100%

2 9030-212

N4-

60 70 4h 80

100%

3 9030-02

9030-211 30

1h 35 9030-212 2-

-N4- 3h

55

9030-02 60

85%

4 9030-04

9030-02 50 60
9030-04 98.5%
5 9030-03
9030-04 45 55

9030-03

96%
6 9030-05
L- 15
25 2h 35 45 1h 55 60 6h
60 65 4h 0 2h
98%
7
20 30
9030-03 2h 9030-05 30 40 5h

85%
80%

3.4.1.9

A C08 TBS

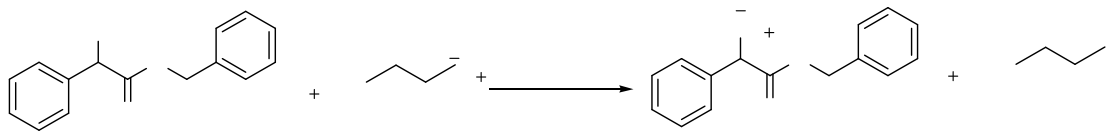

丁 中 1 丁

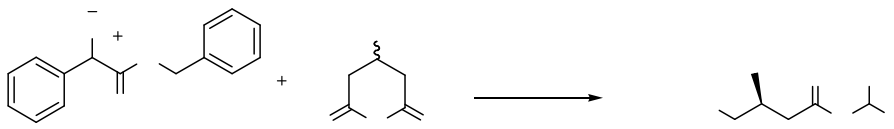

中 1 中 2

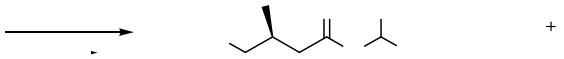

95%

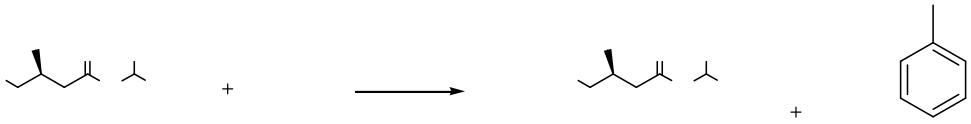

C07

97%

B C10

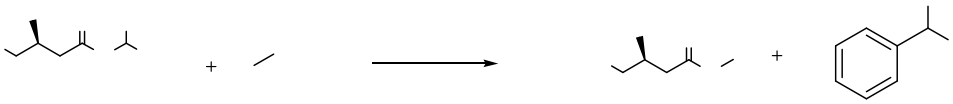

C09

100%

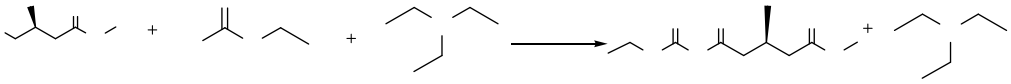

C09 乙 三乙 三乙

95%

C C11

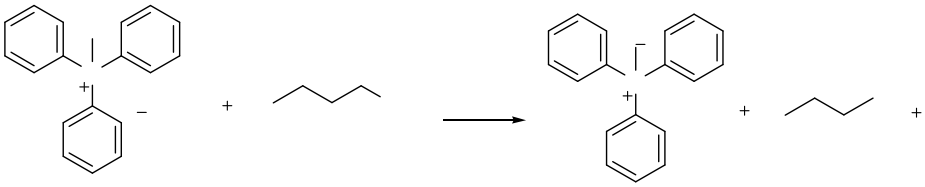

三 丁 三 丁

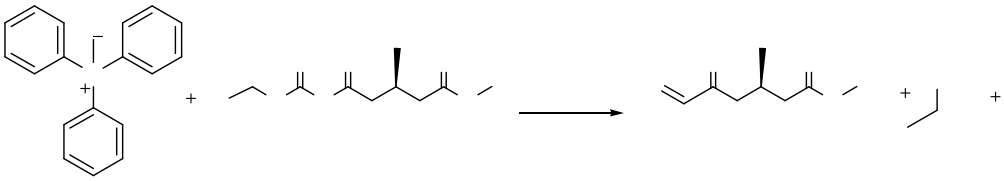

三 乙

50%

D A08

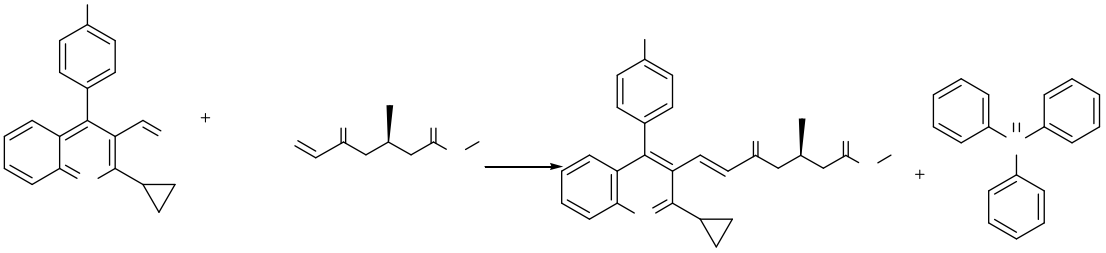

主 中 3 三

90%

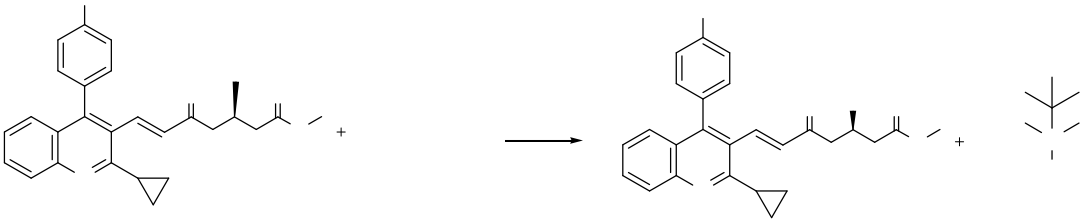

90%

E

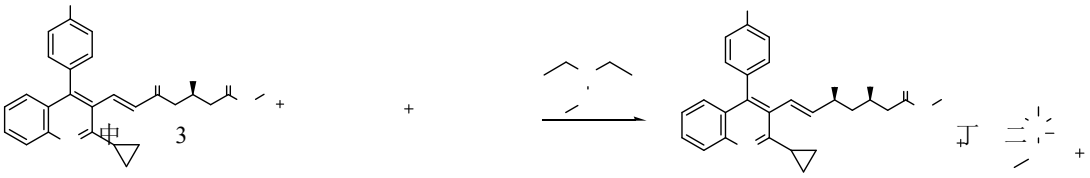

中 3 丁 二

中 4

85%

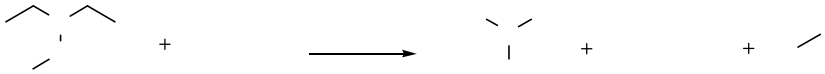

MeBEt2 乙

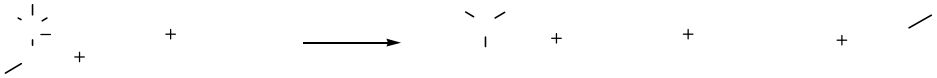

中 4

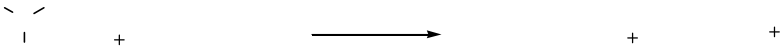

100%

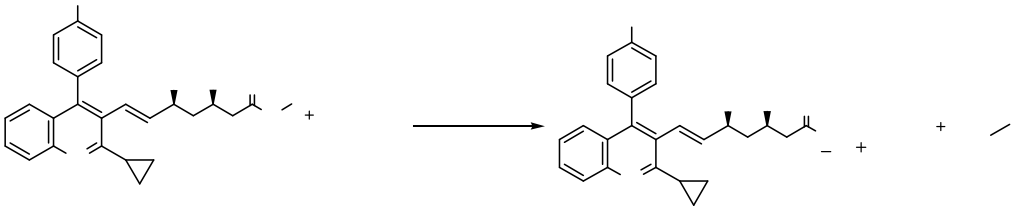

A09 A09

98%

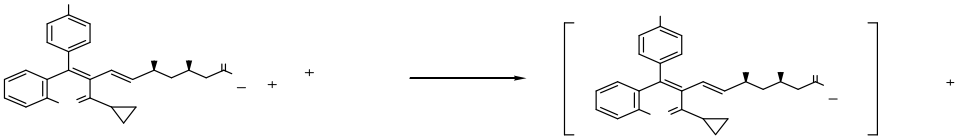

A09 他

85%

3.4-10

1 C08

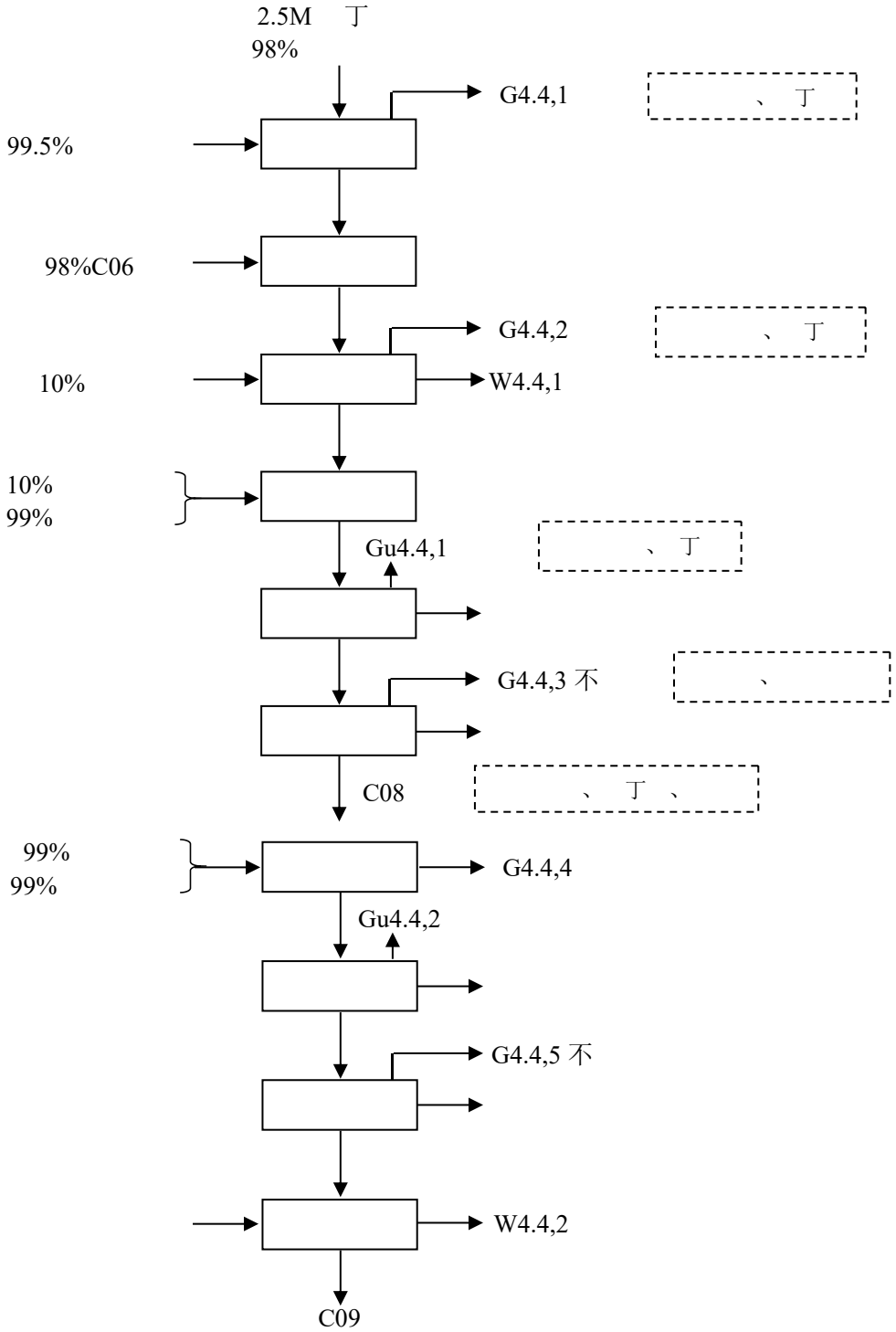

2 C10

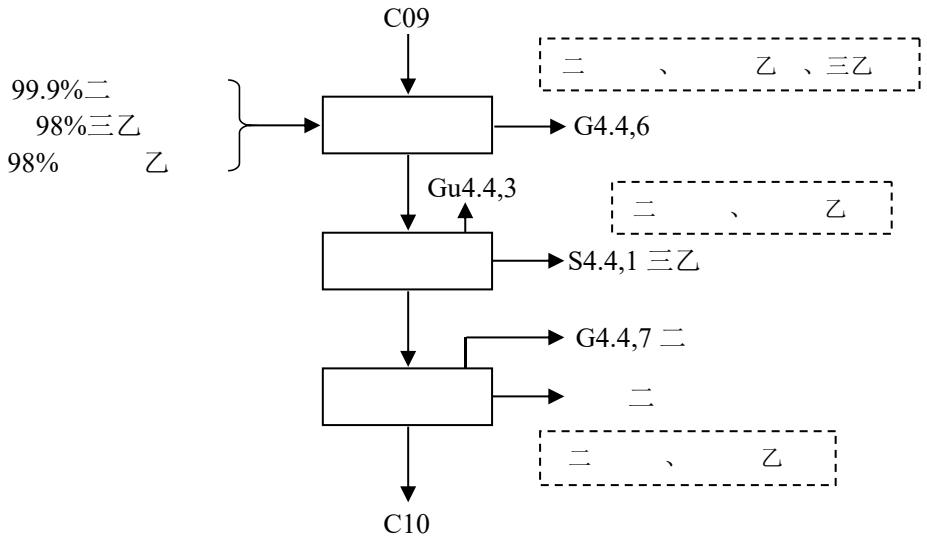
C09
99.9%二
98%三乙
98% 乙
二 、 乙 、三乙
G4.4,6
Gu4.4,3
二 、 乙
S4.4,1 三乙
G4.4,7 二
二
二 、 乙
C10

3 C11

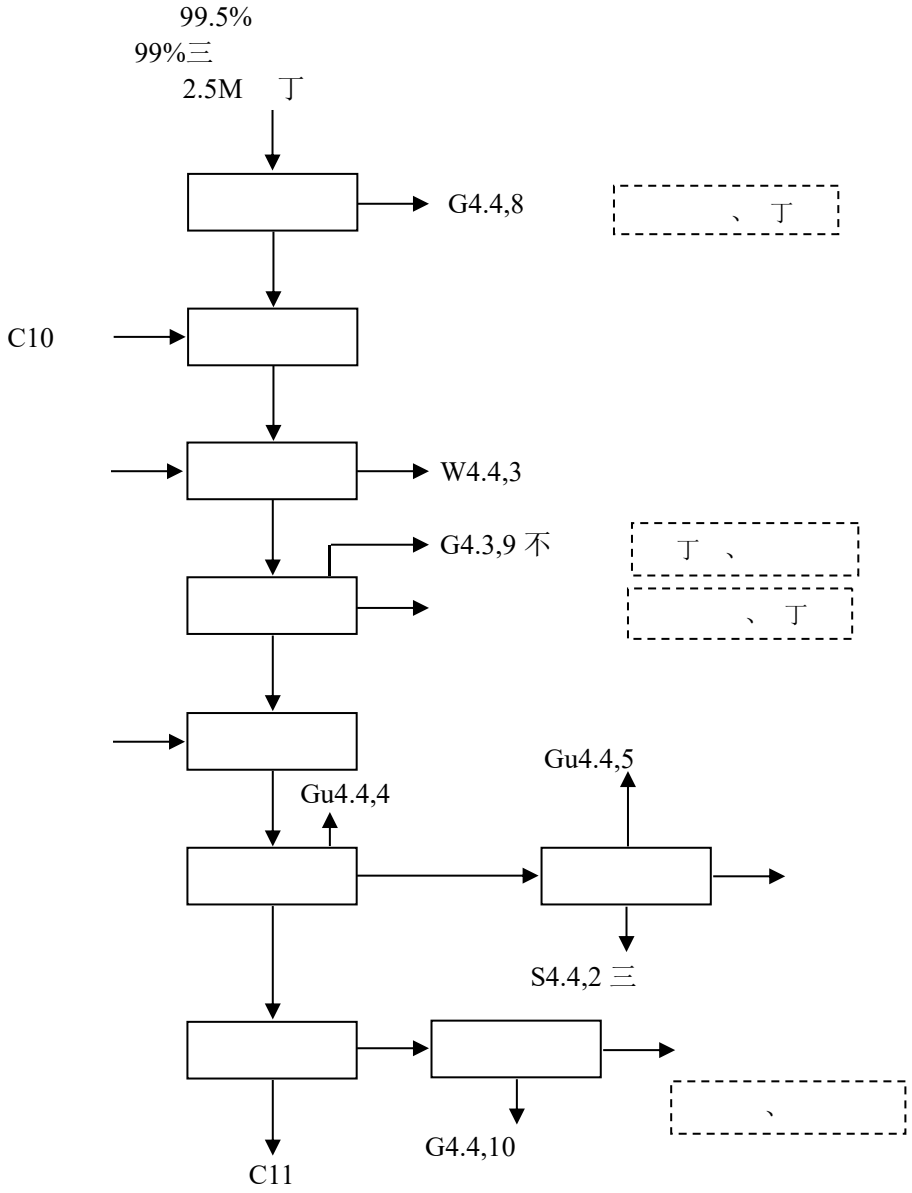
99.5%
99%三
2.5M 丁
G4.4,8
、 丁
C10
W4.4,3
G4.3,9 不
丁 、
、 丁
Gu4.4,5
Gu4.4,4
S4.4,2 三
、
G4.4,10
C11

4 A08

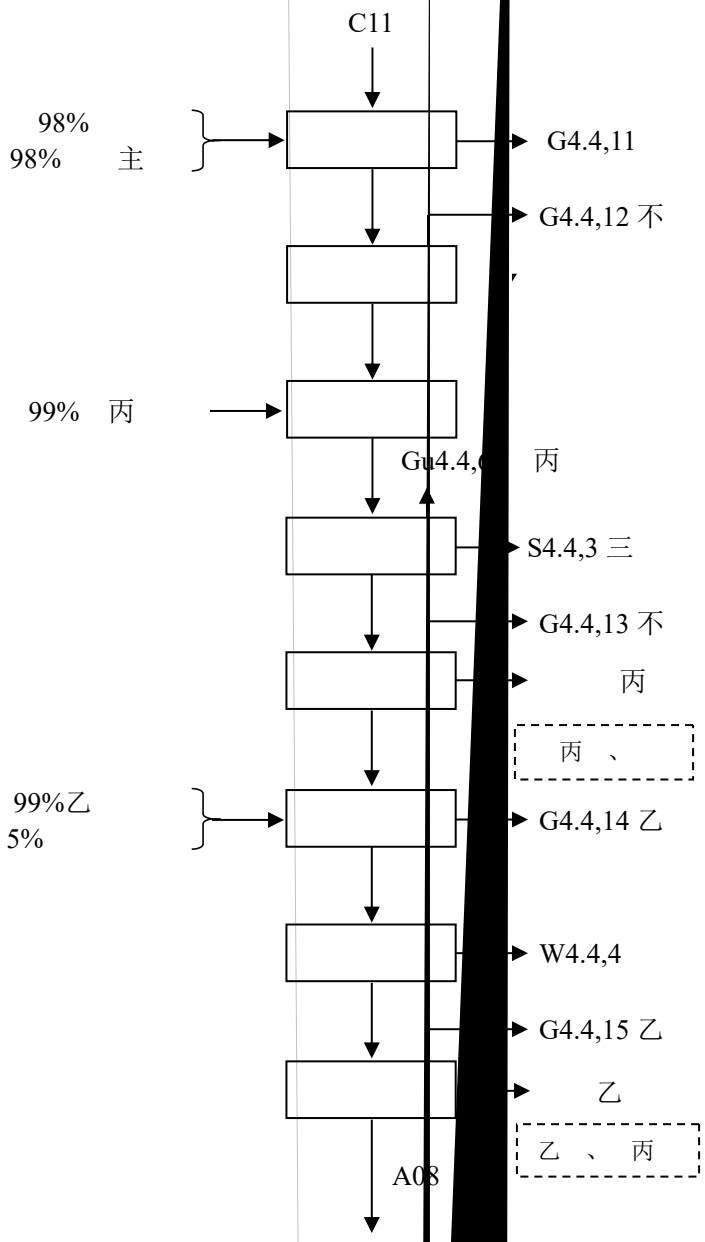
C11
98%
98% 主
G4.4,11
G4.4,12 不
99% 丙
Gu4.4,
丙
S4.4,3 三
G4.4,13 不
丙
丙 、
99%乙
5%
G4.4,14 乙
W4.4,4
G4.4,15 乙
乙
乙 、 丙
A08

5

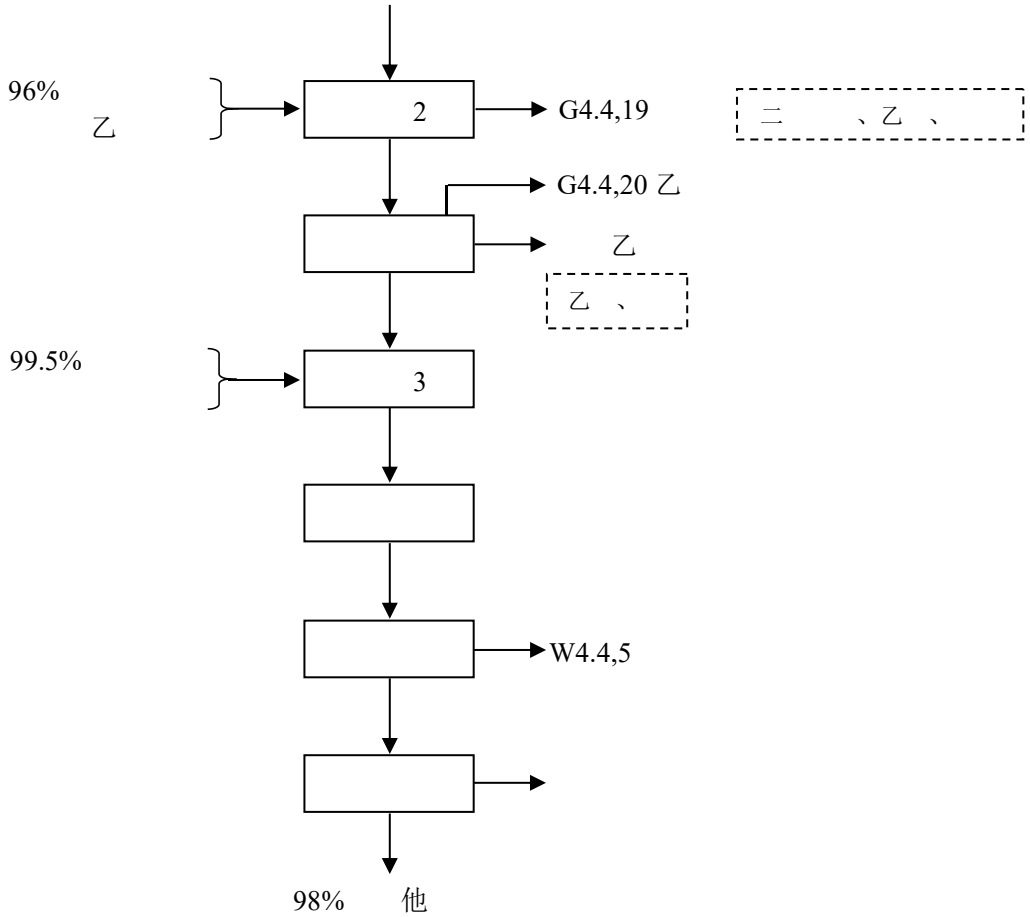

3.4-10

1 C08 (3R)-3-[( )]- ,1-[(R)-]

-40
-30
1h -60 -50 C6
10%
20 30
C08 95%
2 C10 1,5- -(3S)-3-[( )]-

C08 20 30 5h

(3R)-3-[( )]-
, (C09)
C09
S4.4,1

C10 95%

3 C11 (3R)-3-[( )]-5- -6-

THF -60 -50

2h C10 THF 4h

C11

50%

4 A08 (R,E)-7-[2- -4-(4-) -3-]-3- -5- -6-

C11 (2- -4-(4,-)-3-) 8h

2h S4.4,3

(R,E)-7-[2- -4-(4-)- -3]-3-( ) -5- -6- A07

A07 HF

A08 80%

5 [(3R,5S,6E)-7-[2- -4-(4-) -3-]-3,5- -6-]

MeBEt2

0 A08 4h

(3R,5S,6E)-7-[2- -4-(4-) -3-]-3,5- -6- A09

A09

$CaCl_2$

70

75 90% 85%

3.4.2

3.4-1

3.4-1

	1		2000L		7	110		
	2		3m²		7	10		
	3		1000L		3	100	≥0.08MPa	
	4		10m²		2	25		
	5		1000L	PP	2	30		
	6		5000L		3	35 40	≥0.08MPa	
	7		2000L		1	≤50		
	8		700L		1			
	9		LGZ1250		1	15 20		
	10		2000L		3	90		
	11		1000L		6	≤80	≥0.08MPa	
	12		10m²		6	10		
	13		1000L		6			
	14		100L		1		0.2Mpa	
	15		500L		1			
	16		2000L		2			
	17		3000L		1	90		
	18		3000L		18	15 20		
	19		LGZ-1250	304	2	15 20		
	20		FG-120;FG-200	304	2	90		
	21		YK-250	304	1			
	22		3000L	304	1		≥0.08MPa	
	23		30-B	304	1			
	1		3000L		1	0 42	-0.1-0MPa	
	2		2000L		1	0 42	-0.1-0MPa	
	3		PBS-1200		1	0 10	0	
	4		2000L		1	0 32	0	
	5		SS-800		1	0 3	0	
	6		SS-1000		1	0 3	0	
	7		1000L		1	≤62	-0.1-0MPa	
	8		3000L		2	≤60	-0.1-0MPa	
	9		500L		1	≤30	-0.1-0MPa	
	10		150-150L	A3	1	≤50	-0.1-0MPa	
	11		100L	SUS304	1	≤62	0-0.1MPa	

	12		10m²	SUS304	1	≤50	-0.1-0.1MPa	
	13		1500L		1	≤60	-0.1-0.1MPa	
	14		300L	PP	1	≤40	-0.1-0MPa	
	15		1500L+500L		3+1	≤60	-0.1-0MPa	
	16		LBF-1200	SUS304	1	0	0	
	17		SZG-1500	SUS304	2	60 65	-0.1-0MPa	
	18		YK-250	SUS304	1		0	
	19		YYH-2500	SUS304	1		0	
	20		DZQ-800		1		0	
	21	W	WLB-3	A3	1	≤50	-0.1-0MPa	
	1		1000L		1	≤27	0	
	2		SS-1000		1	25 27	0	
	3		1000L		1	65 75	0-0.1MPa	
	4		1000L		1	≤100	-0.1-0MPa	
	5		1500L		1	65 75	0	
	6		100L		1	65 75	0-0.1MPa	
	7		1500L		3	-3 75	0	
	8		LSB-1200		1	-3 0	0	
	9		SZG-1500		2	65 70	-0.1-0MPa	
	10		YK-250		1		0	
	1		1000L		1	≤20	0	
	2		800L	PP	1		0	
	3		1500L+1000L		1+1	≤58	0	
	4		800L	PP	1		0	
	5		2000L		1	≤20	-0.1-0MPa	
	6		600L		1		0	
	7		10m²		3	≤50	-0.1-0.1MPa	
	8		500L		2	160 220	-0.1-0MPa	
	9		1000L		1	100 110	-0.1-0MPa	
	10		10m²		1	≤50	-0.1-0.1MPa	
	11		1000L		1	≤110	-0.1-0MPa	
	12		2000L		1	≤58	0	
	13		1000L		1	85 90	0	
	14		500L		1		0	
	15	W	WLB-3	A3	2	≤50	-0.1-0MPa	

	16		150-150L	A3	2	≤50	-0.1-0MPa	
	17		2000L		1	≤40	0	
	18		800L	PP	1		0	
	19		3000L		1	≤20	0	
	20		1000L		1		0	
	21		500L		2	160 220	-0.1-0MPa	
	22		1000L		1	100 110	-0.1-0MPa	
	23		10m²		3	≤50	-0.1-0.1MPa	
	24	W	WLB-3	A3	1	≤50	-0.1-0MPa	
	25		150-150L	A3	2	≤50	-0.1-0MPa	
	1		3000L		1	≤9	≤0.1MPa	
	2		600L		2		-0.1-0MPa	
	3		1000L		2		-0.1-0MPa	
	4		0.98m³³		1		0	
	5		/		1		0	
	6		4S 12.5		2		0	
	7		GGD2 IEC439		1		0	
	8		XL 21		1		0	
	9		5000L		1	≤80	-0.1-0MPa	
	10		1000L	PP	1		-0.1-0MPa	
	11		1500L		2	55 60	-0.1-0MPa	
	12		10 m²		3	≤50	-0.1-0.1MPa	
	13	W	WLW 100		2	≤50	-0.1-0MPa	
	14		500L		2		-0.1-0MPa	
	15		LSB1250		1		0	
	16		800L		1		0	
	17		1000L		1	≤75	-0.1-0MPa	
	18		1000L		1	≤80	-0.1-0MPa	
	19		3000L		1	≤80	-0.1-0MPa	
	20		SS 1000		1		0	
	21		1500L	PP	1		-0.1-0MPa	
	22		500L		1	≤75	-0.1-0MPa	
	23		2000L		1		-0.1-0MPa	
	24		800L		1		-0.1-0MPa	
	25		F2508S		1		0	
	26		600L		1	70 80	0	

	27		SZG 1000		1	70 80	-0.1-0MPa	
	28		0.5t		1		0	
	29		500L	PP	1		-0.1-0MPa	
	30		65 80	PP	2		0	
	1		2000L		1	165	1.5MPa	
	2		3000L		1	165	1.5MPa	
	3		5000L		1	165	1.5MPa	
	4		500L		1	65	-0.1-0MPa	
	5		2000L		2	65	-0.1-0MPa	
	6		2000L		1	100		
	7		1000L		2	65	-0.1-0MPa	
	8		1000L		2	80		
	9		300L		1			
	10		/	/	1	——	——	
	11		1500L		2	80	-0.1-0MPa	
	1	1	2000L		3	70-85		
	2		2000L		1	5 10		
			1000L		2	5 10		
	3	2	2000L		3	70		
			1000L		1	70		
	4		5000L		2	110		
	5		5000L		3			
	6		S-1200		6			
	7	W	/		3	——	——	
	8		2000L	PP	1	——	——	
	9		/		4	70		
	10		1500L		1	65	-0.1-0MPa	
	1		1500L		1	30-50		
	2		2000L		2	120		
	3		3000L		1	70-80		
	4		3000L		1			
	5		5000L		2			
	6		3000L		2	40-80	-0.1-0MPa	
	7		2000L		1	18-106		
	8		2000L		1	130		

	9		2000L		1	100		
	10		2000L		1	-10-30		
	11		2000L		1	0-60	-0.1-0MPa	
	12		1000L		2	0-40		
	13		2000L		1	0-40		
	14		2000L		1	0-40		
	15		6300L		2	0-40		
	16		5000L		1			
	17		2000L		1	0-50	-0.1-0MPa	
	18		2000L		1	90		
	19		2000L		1	-5-70	0-0.2	
	20		1500L		1	-5-70		
	21		80FP-32	PP	2	——	——	
	22		WLW-100		6	——	——	
	1		1500L		2	-80--50		
	2	C08	2000L		1			
	3	C10	2000L		3	130		
	4	C10	1500L		1	60-70		
	5	C10	1000L		1	40-45	-0.1-0MPa	
	6	C11	2000L		3	20-30		
	7	A08	2000L		4	40-50		
	8		2000L		3	40-50		
	9		2000L		3	-10-0		
	10		5000L		2	-80--60		
	11		500L		1	60-70	-0.1-0MPa	
	12		300 L		4	80-100		
	13		----		4	60-70	-0.1-0MPa	
	14		100-300L		13	15-20		
	15		80FP-32	PP	5	60-70	-0.1-0MPa	
	16		2000L		1	0-50	-0.1-0MPa	

(2024)

3.4.3

HJ883-2017

3.4.3.1

(1)

3.4-2

(2)

3.4-11

3.4-2

			m3/a		(mg/L)	(t/a)			
1#		W3.1,1	650	COD	14776	9.6			
					150	0.097			
					110363	71.7			
					12314	8			
		W3.1,2	3560	COD	18764	66.81	/		
					300	1.068			
					150	0.53			
					15637	55.67			
2#		W3.2,1	293	COD	17604	5.151			
					200	0.059			
					14670	4.29			
		W3.2,2	103	COD	8194	0.84			
					150	0.015			
					6828	0.7			
					223032	22.87			
		W3.3,1	323	COD	5000	1.614	/		
					75	0.024			
					150	0.048			
		W3.4,1	189	COD	5250	1.047			
					35	0.007			
					3500	0.698			
		W3.4,2	271	COD	143155	34			
					1000	0.271			

					57633	9.86			
					85522	24.14			
					50949	14.38			
		W3.4,3	393	COD	33214	12.64			
					350	0.138			
					27679	10.54			
					302831	119.12			
		W3.5,1	49	COD	5000	0.245	/		
					75	0.004			
					150	0.007			
		W4.1,1	304.93		197	0.06			
					14987	4.57			
		W4.1,2	219	COD	120578	26.363	/		
					20303	4.44			
					13067	2.86			
					31800	218.64			
					48797	10.67			
					6611	1.445			
		W4.4,1	92.61		23756	2.2			
					6695	0.62			
					23216	2.15			
				C06	108	0.01			
					101393	9.39			
					33150	3.07			
					11230	1.04			
					13821	1.28			
		W4.4,2	101	COD	25546	2.58	/		
					3661	0.57			
					21884	2.21			
		W4.4,3	106	COD	128542	13.625	/		
					47289	5.013			
					8456	0.896			
					28302	3			
				C10	22544	2.39			
					4239	0.449			
					10883	1.154			
					2887	0.306			
				C11	3943	0.418			
		W4.4,4	37.05		3779	0.14			
				C11	7018	0.26			
					3779	0.14			
					50472	1.87			
					14575	0.54			
					15385	0.57			

				A08	3779	0.14			
		W4.4,5	83	COD	17006	1.405	/		
					3146	0.26			
					9743	0.805			
					9638	0.8			
					15361	1.269			
					1887	0.156			
	1	W4.3,1	36.31	9030--01	275	0.01			
					275	0.01			
					4131	0.15			
					551	0.02			
					6197	0.225			
					72019	2.615			
					106720	3.875			
				9030-211	3856	0.14			
		W4.3,2	37.10		27224	1.01			
					35580	1.32			
					153100	5.68			
		W4.3,3	52.07		14020	0.73			
					102554	5.34			
					128289	6.68			
					10563	0.55			
					20933	1.09			
					12771	0.665			
		W4.2,1	222.37	1	1304	0.29			
					43171	9.6			
					6431	1.43			
					315	0.07			
					360	0.08			
					29141	6.48			
					1934	0.43			
					1484	0.33			
			1033	COD	5000	COD	/		
					45				
			1710	COD	1500	COD	/		
					100				
					100				
					50				
			130	COD	1070	COD	/		
					100				
			717	COD	2500	COD	/		
					100				
			3075	COD	250	COD	/		
					100				
					30				

			45				
			1				

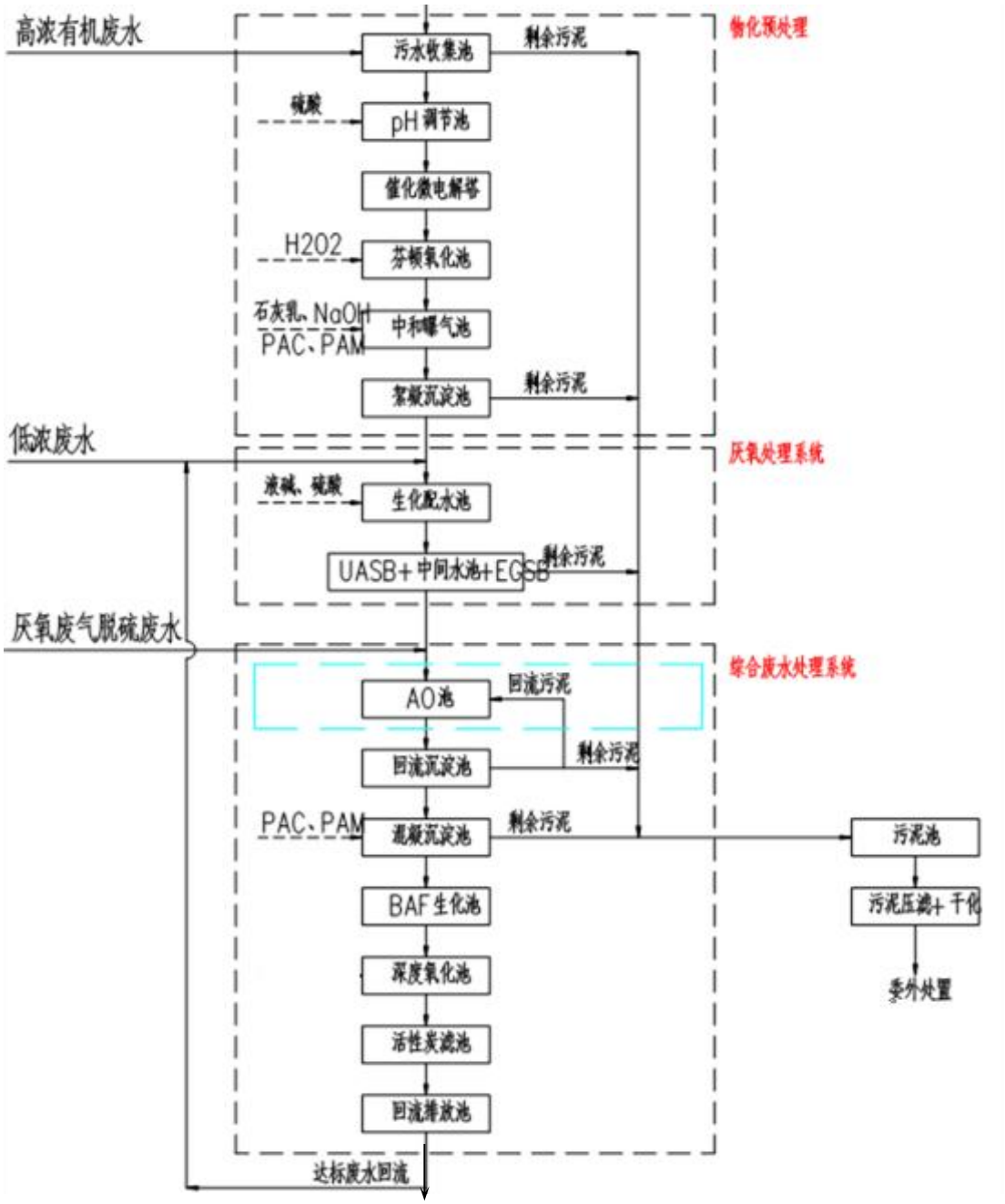

3.4-11

3.4.3.2

(1)

3.4-3

3.4-3

				m³/h	mg/m³	kg/h	t/a			m³/h	mg/m³	kg/h	t/a		m	m	
		G3.1,1		1000	120	0.12	0.42				2.10E-05	4.20E-07	1.50E-06				
		Gu3.1,1		1000	105	0.105	0.378	+		20000	0.075	0.0015	0.0052				
		Gu3.1,2			77.8	0.14	0.503	+			0.002	4.20E-05	0.0002				
		Gu3.1,3			12.8	0.023	0.084	+									
		Gu3.1,4		18000	13.9	0.025	0.04	+ +									
		Gu3.1,5			13.9	0.025	0.05	+RTO									
		Gu3.1,6			13.9	0.025	0.09										
		G3.1,2		2000	8195	16.39	59	+		20000	0.55	0.011	0.085				
		G3.1,3			9800	19.6	70.6										
		G3.2,1		2000	3450	6.9	17.56	+Vaportek + + + + +RTO						DA005	25	1.1	40
		G3.2,2		2000	11	0.022	0.031				0.23	0.0069	0.0135				
		G3.2,3			111.5	0.223	0.31				0.25	0.0075	0.0368				
		Gu3.2,1			27.9	0.223	0.31			30000	0.001	3.31E-05	0.0001				
		Gu3.2,2			0.3	0.002	0.003				0.01	0.0004	0.0121				
		Gu3.3,1			0.4	0.003	0.003				0.006	0.0002	0.0008				
		Gu3.3,2			4	0.032	0.031				0.004	0.0001	0.0006				
		Gu3.3,3			1.1	0.009	0.009										
		Gu3.3,4		8000	15.6	0.125	0.12	+ + +RTO									
		Gu3.3,5			1.1	0.009	0.009										
		Gu3.3,6			11.4	0.091	0.087										
		Gu3.3,7			0.6	0.005	0.005										
		Gu3.3,9			0.5	0.004	0.004										
		Gu3.3,8			4.1	0.033	0.031										
		G3.4,1		2000	20.5	0.041	0.144										
		Gu3.4,1		8000	2.8	2.20E-02	0.098										

				m³/h	mg/m³	kg/h	t/a			m³/h	mg/m³	kg/h	t/a		m	m	
		Gu3.4,2			2.9	0.023	0.105										
		G3.5,1		2000	93.5	0.187	0.471										
					5.5	0.011	0.03										
		G3.5,2			1275	2.55	6.42										
		G3.5,3			8.5	0.017	0.042										
		Gu3.5,1		8000	0.03	2.10E-04	0.001										
		Gu3.5,2			17	0.136	0.344										
		Gu3.5,3			2.4	0.019	0.048										
		Gu3.5,4			0.4	0.003	0.008										
		Gu3.5,5			4.1	0.033	0.083										
		Gu3.5,6			1	0.008	0.02										
		G4.1,1		30000	3787	11.36	33.52	+ + + + + + +RTO		30000	0.16	0.0047	0.1067				
					5.7	0.017	0.15				1.02	0.0305	0.1182				
		G4.1,2			57.7	0.173	0.67				0.16	0.0047	0.014				
					39.6	0.119	0.46				0.003	0.0001	0.0003				
		G4.1,3			1311	3.933	11.61				19.07	0.572	1.35				
		G4.1,4			14	0.042	0.12				0.73	0.0219	0.1382				
		G4.1,5			184	0.552	1.31				0.02	0.0006	0.0042				
					41.7	0.125	0.69				16.28	0.4884	2.1796				
		G4.1,6			40	0.12	0.69				3.3	0.099	0.848				
		G4.4,1			27.3	0.082	0.2				18.72	0.5617	1.3582				
		G4.4,2			244.7	0.734	2.76				0.94	0.0283	0.076				
		G4.4,3			27.7	0.083	1.2				0.24	0.0071	0.0216				
					1.3	0.004	0.2				5.07	0.1521	0.3629				
		G4.4,4			2.7	0.008	0.38				0.34	0.0102	0.1414				
		G4.4,5			2.7	0.008	1.9				0.06	0.0019	0.019				
		G4.4,6			27.7	0.083	0.2				0.02	0.0007	0.0043				
		G4.4,7			27.7	0.083	0.5				0.03	0.001	0.0171				
		G4.4,8			40.7	0.122	0.73				0.19	0.0057	0.008				
					1.3	0.004	0.02										
		G4.4,9			107.3	0.322	1.77										
					3.3	0.01	0.09										

				m³/h	mg/m³	kg/h	t/a			m³/h	mg/m³	kg/h	t/a		m	m	
		G4.4,10			0.1	0.0004	0.03										
		G4.4,11			1.4	0.0042	0.01										
		G4.4,12			1.4	0.0042	0.15										
		G4.4,13			13.3	0.04	0.12										
		G4.4,14			13.3	0.04	0.1										
		G4.4,15			13.3	0.04	0.3										
		G4.4,16			3.3	0.01	0.03										
		G4.4,17			3.3	0.01	0.3										
		G4.4,18			216.7	0.65	1.49										
					6.7	0.02	0.04										
					146.7	0.44	1.05										
		G4.4,19			1.4	0.0042	0.1										
		G4.4,20			0.1	0.0004	1.35										
		Gu4.4,1				0.25	0.6										
		Gu4.4,2				0.033	0.19										
		Gu4.4,3				0.208	0.5										
		Gu4.4,4				1.625	3.9										
		Gu4.4,5				0.25	0.6										
		Gu4.4,6				0.042	0.1										
		G4.2,1			0.4	0.001	0.01										
		G4.2,2			0.4	0.001	0.06										
		G4.2,3			0.4	0.001	0.01										
		G4.2,4			4	0.013	0.4										
		G4.2,5			8	0.025	1.4										
		G4.2,6			0.2	0.001	0.2										
		Gu4.2,1			/	0.35	2.46										
		Gu4.2,3			/	0.075	0.55										
					/	0.00025	0.001										
					/	0.0035	0.014										
					/	0.0055	0.022										
		G4.3,1		30000	0.1	0.0002	0.005										
		G4.3,2			9.7	0.029	0.035										
		G4.3,3			0.7	0.002	0.055										

				m³/h	mg/m³	kg/h	t/a			m³/h	mg/m³	kg/h	t/a		m	m	
		G4.3,4			1	0.003	0.005										
		G4.3,5			1	0.003	0.175										
					48.7	0.146	0.045										
		G4.3,6			3.3	0.01	0.01										
		G4.3,7			103.7	0.311	0.375										
		G4.3,8			0.3	0.001	0.005										
		G4.3,9			0.2	0.0005	0.015										
		G4.3,10			62.3	0.187	0.58										
		G4.3,11			1.7	0.005	0.01										
		G4.3,12			0.2	0.0005	0.005										
		G4.3,13			1.3	0.004	0.005										
		G4.3,14			1.3	0.004	0.005										
		G4.3,15			1.3	0.004	0.005										
		G4.3,16			13.7	0.041	0.105										
		G4.3,17			7	0.021	1.05										
		G4.3,18			1.3	0.004	0.035										
		G4.3,19			0.1	0.0004	0.005										
		G4.3,20			1.7	0.005	0.005										
		G4.3,21			1.7	0.005	0.065										
		G4.3,22			0.3	0.001	0.005										
		G4.3,23			24.7	0.074	0.09										
		G4.3,24			14.7	0.044	0.61										
		G4.3,25			3.3	0.01	0.01										
		G4.3,26			5	0.015	0.025										
		G4.3,27			49.3	0.148	0.175										
		G4.3,28			8.3	0.025	0.57										
		G4.3,29			0.3	0.001	0.01										
		Gu4.3,1				0.01	0.01										
		Gu4.3,2				0.043	0.05										
		Gu4.3,3				0.029	0.035										
		Gu4.3,4				0.016	0.02										
		Gu4.3,5				0.246	0.295										

3.4.3.3
(1)

( )

3.4-4

3.4-4

				(t/a)				/	
1	( )	HW02	271-001-02	292.07		/	/		292.07
2		HW02	271-001-02	6.33		/	/		6.33
3		HW02	271-005-02	0.018		/	/		0.018
4		HW08	900-217-08	0.5					0.5
5		HW49	900-041-49	0.17		/	/		0.17
6		HW49	900-047-49	0.18		/	/		0.18
7		HW02	900-000-02	30		/	/		30
8		HW49	900-039-49	1		/	/		1
9			/	3.5		/	/		3.5
10			/	1.5		/	/		1.5
11			/	18		/	/		18
12		HW02	271-001-02	21.56		/	/		21.65
13		HW06	900-404-06	24.38		/	/		24.38
14		HW06	900-404-06	1.60		/	/		1.60
15		HW06	900-404-06	3.1		/	/		3.1
16		HW06	900-404-06	12.50		/	/		12.50
17		HW06	900-404-06	22.52		/	/		22.52
18		HW06	900-404-06	14.75		/	/		14.75
19		HW06	900-404-06	14.45		/	/		14.45

1. (GB 18597-2023) “ ”(
)
2. (HJ 1276-2022)
([2020]401
3.
4.

1.
2.
3. GB18599-2020

3.4.3.4

(GB12348-2008)3

3.4.3.5

15cm +
12-20cm 20cm
3mm 25cm
20-30cm
20-30cm 15-20cm
+5-8cm 15-20cm
15-20cm +

HJ
1209-2021 2023 12
“ 12
1 15 2
pH

GB36600-2018 1 45 pH

GB36600-2018

4 1
6

GB/T14848-2017 ”

3.4.4

(1)
(2)
(3)
(4) (5)
3.4-6

3.4-6

				/		/
				/		/
		pH		/		/

	2			/		
	1			/		
	2			/		
				/		
	RTO					/
			COD SS	/		
				/		

3.5

3.5-1

3.5-1

		:
		( )

		1 2 2
		1 504m³ 14×8×4.5m 448m³(4.0m)
		(1) 319m³(14×7.6×3.5 3m) (2) COD
		(1) 319m³(14×7.6×3.5 3m) (2) 448m³ 14×8×4.5 4.0m (3) pH COD
		A

		2 1 2
		1 448㎥
		200

3.6

3.6.1

3.6-1

				1	
				2	
				2	
				2	
				2	
				1	
				6	
				10	
				4	
				1	
				6	
				6	
				2	
				1	
			5Kg	40	
				8	
				35	
				20	
				6	
				6	
				1	
				2	
				2	
				4	
				4	
				4	
				4	

				2	
				10	
				6	
				3	
				1	
				1	
				2	
		COD	GN-CODcr 03	1	
				1	
			GN-TN03	1	
			GN-TP03	1	
				1	
		pH	LITI	1	
		VOC		2	
				1	
				6	
				6	
				2	

3.6.2

3.6-2

3.6-2

				15195278510	
				13852391855	
				15895969505	
				18020185896	
				18118251937	
				18662987265	
				18020185896	
				15952319701	
				13770410269	
				18655401386	
				18795812556	

					18852359452	
					19942503233	
					15851711321	
					13776721344	/
					15195502660	/
					15050812849	/
					15949196706	/
					15261758025	/
					13915141548	/
					15195305950	/
					18912055166	
					15189503852	
					15195303040	
					15052657436	
					18118251937	
					13770410269	
					18012088561	
					17851561162	
					18021928026	
					15195307684	
					17150510428	
					13016590107	
					15261758610	
	( )				18662987265	
					13994967990	
					19984949520	/
					15052651376	
					18036531272	
					19984969689	

3.6-3

3.6-3

	0517-87222589
	0517-87217016
	18936779867
	12345 0517-83508069
	12345
	0517-83672267
	12365
	96520

	110
	119
	120

4.

4.1

( )

4.1.1

4.1.1.1

1.

2010 12 30 9 50

4 5

8 5 2 1

2010 12 30

9 30

;

4

2 3000

2.

3.

(1)

(2)

(3)

(4)

(5)
(6)
(7)

(8)

4.1.1.2

1.

2005 11 13 13 30
T-102
15 105m 55#
800m 100m 40m
5 55# 5
8 60 7

2.

2005 11 14 10 10# ( )

10km 5
2005 11 19 21

2.5 103.6 2005 11 20 7
2005 11
23 19 30 16km
2005 11 29 8.5
2005 12 16

3.

(1)

(2)

(3)

4.1.1.3

1.

2012 12 31 7 40

3

5 2

80

28 2

2.

38.7

30 8.7

3.

(1)

2013

88

(2)

2012 103

(4)

4.1.1.4 “8.31”

1.

2013 8 31 , ,

15 ,7 ,18 8 31 8 ,

10 40 , 24 , 10 45 ,

,

, :

，，
，，
，，

，，
，，
（ ： ，
），，

，，

，
，
，
，，
，
，，

2.

3.

Q-2(1)

4.1.1.5

1.

2005 7 17

1

376

1

2.

2005 7 17 2-3

1

3.

(1)

(2)

(3)

4.1.1.6 “7.16”

1.

2010 7 16 18 02

(7.16) ,

，

“ ”

2.

，

， ， 7 2

3

3.

(1)

(2)

(3)

4.1.1.7

1.

1989 5 31

(VTPS) 7 50

10 40ч 10 10K

10 25

h f ıє :ضي v ⊃ ⊃ ⊃ ⊃

2 1

2.

3. B! +•"ƒypÐ©

ʒ ч ∂ʌn * Ɇ ‚ ʍ ʌ

'H ʎ H

3 7

2.
18 46

3.
(1)

(2)

(3)
AQ/T3034

4.1.1.9

1.

2014 12 23 “ ”

10

23

8 02 3

2007

15

42 21 28

14

2.

3.

(1)

(2)

“ ”

(3)

4.1.1.10

1.

C

2006 4 COD 685mg/L

”

COD 3300mg/L,

11000mg/L

( ) 1.6

2.

COD 3300mg/L, 11000mg/L

3.

4.1.1.11

1.

2007 1 20 4 20 6
(
) “ ”
“ ”
2007 1 20 4 20
“ ” F/32668

2.

1
2 10
60

3.

“
”

(1)

(2)

12369

(3)

4.1.1.12

1.

2005 12 18 17 45

4 6

1787

200

pH 98%

DN80

80 12

18 17 52

4

9

6

19 2

( )

2.

18 20 6300
8.5
19 4 0.056-1.52mg/m³

3.
DCS
DCS

4.1.1.13
1.
2014 3 1 14 45 E23504/
E2932 29.14

100

5 6

8
10 184 5
40
3 3 18 12
42 1000

DNA

3 11
30 3 17 40

E23504/ E2932
HC2923/ H085J

(1)
(2)
(3)
(4)

(4)

(5)

(6)

(7)

(8)

(9)

GB18564.1-2006

2.

3.

“ ”

4.1.1.14 RTO

1.

RTO 2015 3 8 9 43 3 27 3 20

RTO 100

POP PL1 PL2 DN50 DN350

(

)

RTO RTO R—RTO(

)

1

73

(1)-(3)

$$C_1=\frac{M\times P_1}{RT_1} \quad (1)$$

$$C_2=\frac{M\times P_2}{RT_2} \quad (2)$$

$$\eta=\frac{P}{P-P_2}\times(1-\frac{P_2}{P_1}) \quad (3)$$

75

表 1 不同温度下有机物饱和浓度安全性分析

序号	物质名称	温度/℃	饱和浓度/(g·m^{-3})	对应体积比/%（V/V）	对应爆炸极限/%（V/V）	安全与否
1	环氧乙烷	75	1 891.98	96.21	3%～100%	不安全
		−10	552.83	28.11		不安全
2	环氧丙烷	75	2 303.29	88.83	2.8%～37%	不安全
		−10	140.78	5.43		不安全
3	三甲胺	75	2 610.74	98.94	2%～11.6%	不安全
		−10	406.04	15.39		不安全
4	异丙醇	75	2 060	76.83	2.0%～12.7%	不安全
		−10	13.74	0.51		安全
5	苯乙烯	75	3 028.68	65.14	1.1%～6.1%	不安全
		−10	3.33	0.07		安全

75

PL

120m^3/h 3 360m^3/h

5000m^3/h

7.2 1 2.4

2

PL

DN50

POP PL1 PL2

RTO

SUS304 SUS316L

(
) HC1 RTO

RTO

2.

3.
RTO

RTO
RTO

RTO

PP PP

RTO

1000ppm 5000ppm
RTO

RTO

RTO TVOC

4.1.2
4.1.1
4.1-1

4.1-1

1		1 1
		2 2
2		3 3
		4 “ 8.31 ” 4
		5 5
3		6 “ 7.16 ” 6
4		8 8
5		9 9

		10 **10** **14** RTO RTO 100 **14** RTO RTO
6		**11** **11**
7		**7** **7**
8		**12** **12** DCS **13** **13**
9		——

4.2

(4.1-1)

4.2.1

1

2 2 ,

1

4.2.1.1

4.2-1 kg/(m^2 · h

	92-81	55.11	49.33	78.1	165.37	138.29	125.84	66.36	57.6

57.6kg/ m^2 · h 1

478m^2 7.648kg/s

60min 27.533t CO

G =2330qCQ

G —— kg/s

C —— (%) 52%

q —— (%) 1.5-6.0% 6%;

Q —— t/s

4.2-2 :kg/s

	C	q	Q			
CO	52%	6%	0.0076t/s	60min	0.552kg/s	3*4m

4.2.1.2

448m^3 319m^3

(GB/T50483-2019)

(1) (2)

(3)

$V = V_1+V_2+V_3 \quad {}_{max}-V_4-V_5$

$(V_1+V_2+V_3)_{max}$— (m^3)

V_1— (m^3)

V_2— (m^3)

V_3—

(m^3)

V_4— (m^3)

V_5— (m^3)

V_1

V_1 $1m^3$

V_2

$V_2=Q \quad t$

Q —

(GB50974-2014) 3.2.2

15L/s 54m^3/h

3.6.2

5h ; t — 5h; V_2=270m^3

V_3

913mm 108 31200m^2

264m^3

V_4 V_4=0m^3

1500m 0.09m^2

V_5 135m^3

4.2-3

		(m^3)	(m^3)	(m^3)	(m^3)	(m^3)	(m^3)
1	1	1	270	264	0	135	400

$V = V_1+V_2+V_3 \quad {}_{max}-V_4-V_5$= 1+324+264 -0-135=400$m^3$

448m^3 5h

0.5 COD 4200mg/L

4.2.2

,

, , , ;

(
)

4.2.2.1

0.98m³ 0.64

(HJ/T169-2018) 1 1m³
10mm 10min
(HJ/T169-2018) F.1.2

$$Q_G = YC_d AP\sqrt{\frac{M\gamma}{RT_G}\left(\frac{2}{\gamma+1}\right)^{\frac{\gamma+1}{\gamma-1}}}$$

4.2-4

4.2-4

Cd			1.00
A		m²	0.00008
R		J/ mol ·K	8.314
P		Pa	2.01×10^5
M		Kg/mol	0.017
P_0		Pa	1.01×10^5
T_G		K	298
Y			1.0
γ			1.301
Q		kg/s	0.028
		s	600
		t	0.02

0.028kg/s

4.2.2.2

1

1500kg
135kg 10min
0.225kg/s

2

3 5m³ 10m³ 15m³, 1 15m³ 14 , ,

(HJ169-2018) F1.1.1

$$Q = C_d A\rho\sqrt{\frac{2(P-P_0)}{\rho}+2gh}$$

Q—— kg/s
C_d——
A—— m²
ρ —— kg/m³
P—— Pa
P_0 —— Pa
g—— 9.81m/s²
h—— m

4.2-5

Cd			0.55
A		m²	1.0×10^{-5}
ρ		kg/m³	1190
P		Pa	101325
P0		Pa	101325
G		m/s²	9.81
h		m	0.5
Q		kg/s	0.02
T		s	900
Qt		Kg	18

0.02kg/s

0.02kg/s 15min 18kg

4.2.2.3

1 200L 1 547.2 15min

(HJ169-2018) F1.4.3

$Q_1=a\times p\times M/R\times T_0\times u^{2-n/2+n}\times r^{4+n/2+n}$

Q_1—— kg/s

a n——

p—— Pa

R—— J/mol.K

T_0—— K

M—— kg/mol

u—— m/s

r—— m

4.2-6

	n	α
(A,B)	0.2	3.846×10^{-3}
(D)	0.25	4.685×10^{-3}
(E,F)	0.3	5.285×10^{-3}

4.2-7

		a	n	p (Pa)	R	M	u (m/s)	r (m)	(kg/s)	(min)
		5.285×10^{-3}	0.3	4890	8.314	0.092	2.56	13	0.24	15
							1.5		0.157	

0.24kg/s

0.157kg/s

15min

4.2.3

(

)

( )

4.2.1.2

——

4.2.2

4.2.1

4.2.4

4.2.2

DCS

2g/min 2.3g/min 0.417g/min

4.2.2.2

4.2.5

(1)

RTO 2g/min

2.3g/min 0.417g/min 30min

(2)

44.5m^3

4.2.6

1 1 1

(1)

4.2.5 2.08g/min 30min

(2)

4.2.5 44.5m^3 (3)

, 3

3

4.2.7

4.2.1

4.2.8

DCS

4.2.1

1 20

4.2.9

4.2-8

4.2-8

1		[1] CO 0.552kg/s 30min
		[2] 400m³
2		[3] 0.028kg/s, 10min
		[4] 0.225kg/s 10min
		[5] 0.24kg/s 0.157kg/s 15min
3		[6] [2]
		[7]RTO RTO 2g/min 2.3g/min 0.417g/min 15min
4		[8] [7]
5		[9] RTO 2g/min 2.3g/min 0.417g/min

		30min
		[10] 44.5m³
6		[11] [7]
		[12] [10]
		[13]
7		[12] [3] [1][2]
8		[14] 20 [1]

4.3

4.2-7

4.3.1

/

4.3.1.1

CO

CO 0.552kg/s 30min

(1)

CO

AFTOX

4.3-1

4.3-1

		118.868168956E	
		33.316753557N	
	m/s	1.5	2.56
		25	16
	%	50	73
		F	E
	m	0.03	
	m	/	

(2)

AFTO

4.3-2 4.3-3

4.3-4 4.3-1

4.3-2

	-1 mg/m³	-2 mg/m³
CO	380	95

4.3-3 (CO)

m				
	(min)	mg/m³	(min)	mg/m³
10.00	0.11	85336.00	0.07	21366.00
60.00	0.67	5823.40	0.39	1526.40
110.00	1.22	2759.00	0.72	707.21
160.00	1.78	1694.40	1.04	416.57
210.00	2.33	1155.60	1.37	277.20
260.00	2.89	842.83	1.69	199.25
310.00	3.44	644.67	2.02	151.03
360.00	4.00	510.91	2.34	118.99
410.00	4.56	416.14	2.67	96.53
460.00	5.11	346.41	2.99	80.13
510.00	5.67	293.49	3.32	67.75
560.00	6.22	252.32	3.65	58.17
610.00	6.78	219.60	3.97	50.57
660.00	7.33	193.13	4.30	44.44
710.00	7.89	171.39	4.62	39.42

m				
	(min)	mg/m³	(min)	mg/m³
760.00	8.44	153.29	4.95	35.24
810.00	9.00	138.05	5.27	31.73
860.00	9.56	125.08	5.60	28.74
910.00	10.11	113.95	5.92	26.18
960.00	10.67	104.31	6.25	23.97
1010.00	11.22	95.91	6.58	22.04
1060.00	11.78	88.53	6.90	20.34
1110.00	12.33	82.02	7.23	18.85
1160.00	12.89	76.24	7.55	17.52
1210.00	13.44	71.08	7.88	16.34
1260.00	14.00	66.46	8.20	15.28
1310.00	14.56	62.29	8.53	14.32
1360.00	15.11	58.53	8.85	13.46
1410.00	15.67	54.79	9.18	12.60
1460.00	16.22	52.31	9.51	12.01
1510.00	16.78	50.03	9.83	11.47
1560.00	17.33	47.91	10.16	10.96
1610.00	17.89	45.95	10.48	10.50
1660.00	18.44	44.12	10.81	10.07
1710.00	19.00	42.41	11.13	9.67
1760.00	19.56	40.82	11.46	9.29
1810.00	20.11	39.33	11.78	8.94
1860.00	20.67	37.93	12.11	8.61
1910.00	21.22	36.62	12.44	8.31
1960.00	21.78	35.38	12.76	8.02
2010.00	22.33	34.22	13.09	7.74
2060.00	22.89	33.12	13.41	7.49
2110.00	23.44	32.08	13.74	7.24
2160.00	24.00	31.10	14.06	7.01
2210.00	24.56	30.16	18.39	6.80
2260.00	25.11	29.28	18.71	6.59
2310.00	25.67	28.44	19.04	6.40
2360.00	26.22	27.64	19.37	6.21
2410.00	26.78	26.88	20.69	6.04
2460.00	27.33	26.16	21.02	5.87
2510.00	27.89	25.46	21.34	5.71
2560.00	28.44	24.80	21.67	5.56
2610.00	29.00	24.17	21.99	5.41
2660.00	29.56	23.57	22.32	5.28
2710.00	34.11	22.99	22.64	5.14
2760.00	34.67	22.44	22.97	5.02
2810.00	35.22	21.91	23.29	4.90
2860.00	36.78	21.40	23.62	4.78
2910.00	37.33	20.91	23.95	4.67
2960.00	37.89	20.44	24.27	4.56
3010.00	38.44	19.99	24.60	4.46
3060.00	39.00	19.56	25.92	4.36

m				
	(min)	mg/m³	(min)	mg/m³
3110.00	39.56	19.14	26.25	4.27
3160.00	40.11	18.74	26.57	4.17
3210.00	40.67	18.35	26.90	4.09
3260.00	41.22	17.98	27.22	4.00
3310.00	41.78	17.62	27.55	3.92
3360.00	42.33	17.27	27.88	3.84
3410.00	42.89	16.93	28.20	3.77
3460.00	43.44	16.61	28.53	3.69
3510.00	44.00	16.29	28.85	3.62
3560.00	44.56	15.99	29.18	3.56
3610.00	46.11	15.69	29.50	3.49
3660.00	46.67	15.41	29.83	3.43
3710.00	47.22	15.13	31.15	3.37
3760.00	47.78	14.87	31.48	3.31
3810.00	48.33	14.61	31.81	3.25
3860.00	48.89	14.36	32.13	3.19
3910.00	49.44	14.11	32.46	3.14
3960.00	50.00	13.88	32.78	3.09
4010.00	50.56	13.65	33.11	3.04
4060.00	51.11	13.42	33.43	2.99
4110.00	51.67	13.21	33.76	2.94
4160.00	52.22	12.99	34.08	2.89
4210.00	52.78	12.79	34.41	2.85
4260.00	53.33	12.59	34.73	2.81
4310.00	53.89	12.40	35.06	2.76
4360.00	54.44	12.21	35.39	2.72
4410.00	55.00	12.02	36.71	2.68
4460.00	56.56	11.84	37.04	2.65
4510.00	57.11	11.67	37.36	2.61
4560.00	57.67	11.50	37.69	2.57
4610.00	58.22	11.34	38.01	2.54
4660.00	58.78	11.17	38.34	2.50
4710.00	59.33	11.02	38.66	2.47
4760.00	59.89	10.86	38.99	2.43
4810.00	60.45	10.71	39.32	2.40
4860.00	61.00	10.57	39.64	2.37
4910.00	61.56	10.43	39.97	2.34
4960.00	62.11	10.29	40.29	2.31

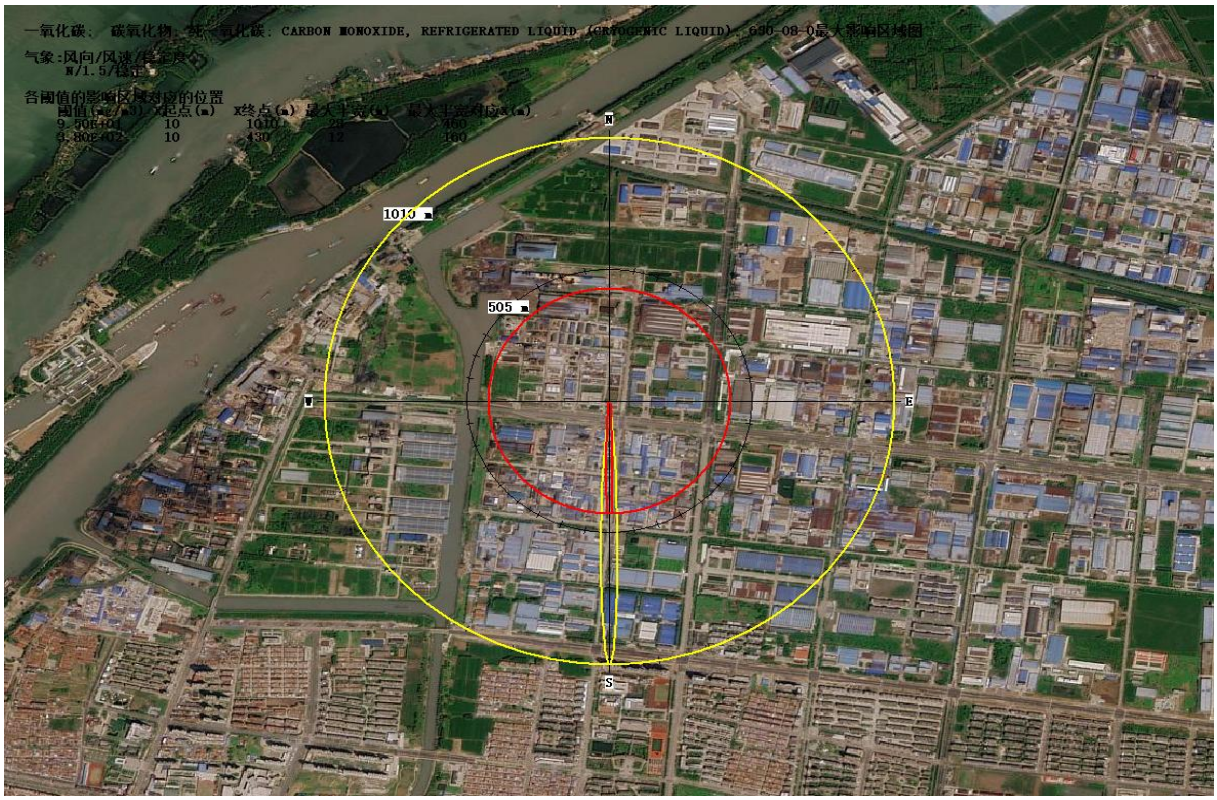
一氧化碳：碳氧化物：纯一氧化碳：CARBON MONOXIDE, REFRIGERATED LIQUID (CRYOGENIC LIQUID)：630-08-0最大影响区域图
气象:风向/风速/稳定度
N/1.5/稳定
各阈值的影响区域对应的位置
阈值(mg/m3) x起点(m) x终点(m) 最大半宽(m) 最大半宽对应x(m)
9.50E+01 10 1010 22 460
3.80E+02 10 430 12 160
N
1010
505
W
E
S

—CO

一氧化碳：碳氧化物：纯一氧化碳：CARBON MONOXIDE, REFRIGERATED LIQUID (CRYOGENIC LIQUID)：630-08-0最大影响区域图
气象:风向/风速/稳定度
N/2.5/稳定
各阈值的影响区域对应的位置
阈值(mg/m3) x起点(m) x终点(m) 最大半宽(m) 最大半宽对应x(m)
9.50E+01 10 410 24 210
3.80E+02 10 170 10 110
N
410
205
W
E
S

—CO

4.3-4

4.3-4 CO mg/m³

		km		5min	10min	15min	20min	25min	30min		5min	10min	15min	20min	25min	30min
			(min)							(min)						
1		2974	0.0|5	0	0	0	0	0	0	0.0|5	0	0	0	0	0	0
2		2628	0.0|5	0	0	0	0	0	0	0.0|5	0	0	0	0	0	0
3		2848	0.0|5	0	0	0	0	0	0	0.0|5	0	0	0	0	0	0
4		2433	0.0|5	0	0	0	0	0	0	0.0|5	0	0	0	0	0	0
5		2729	0.0|5	0	0	0	0	0	0	0.0|5	0	0	0	0	0	0
6		1647	0.0|5	0	0	0	0	0	0	0.000494|30	0	0	0	0.000071	0.000492	0.000494
7		2228	0.0|5	0	0	0	0	0	0	0.0|30	0	0	0	0	0	0
8		2234	0.0|5	0	0	0	0	0	0	0.000001|25	0	0	0	0	0.000001	0.000001
9		2031	0.0|5	0	0	0	0	0	0	2.971184|30	0	0	0	0.001628	1.436553	2.971184
10		1434	0.0|5	0	0	0	0	0	0	0.661743|30	0	0	0.000001	0.174591	0.661229	0.661743
11		3016	0.0|5	0	0	0	0	0	0	0.000065|30	0	0	0	0	0	0.000065
12		1324	0.0|5	0	0	0	0	0	0	4.283186|30	0	0	0.00002	1.967045	4.283018	4.283186
13		2430	0.0|5	0	0	0	0	0	0	0.006477|30	0	0	0	0	0.001114	0.006477
14		3516	0.0|5	0	0	0	0	0	0	0.0|30	0	0	0	0	0	0
15		3962	0.0|5	0	0	0	0	0	0	0.0|30	0	0	0	0	0	0
16		4214	0.0|5	0	0	0	0	0	0	0.0|30	0	0	0	0	0	0
17		1677	0.0|5	0	0	0	0	0	0	0.000039|25	0	0	0	0.00001	0.000039	0.000039
18		4607	0.0|5	0	0	0	0	0	0	0.0|25	0	0	0	0	0	0
19		3279	0.0|5	0	0	0	0	0	0	0.116891|30	0	0	0	0.004847	0.11275	0.116891
20		2423	0.0|5	0	0	0	0	0	0	0.0|30	0	0	0	0	0	0

-1 430m
-2 1010m
, 962m, 360 -1
170m -2 410m

ERG2000 “
30m 200m 200m
125m 600m
1800m ”
ERG2000
30m 200m
410m 125m
600m 1800m

4.3.1.2

(1)

( )

4.3-1

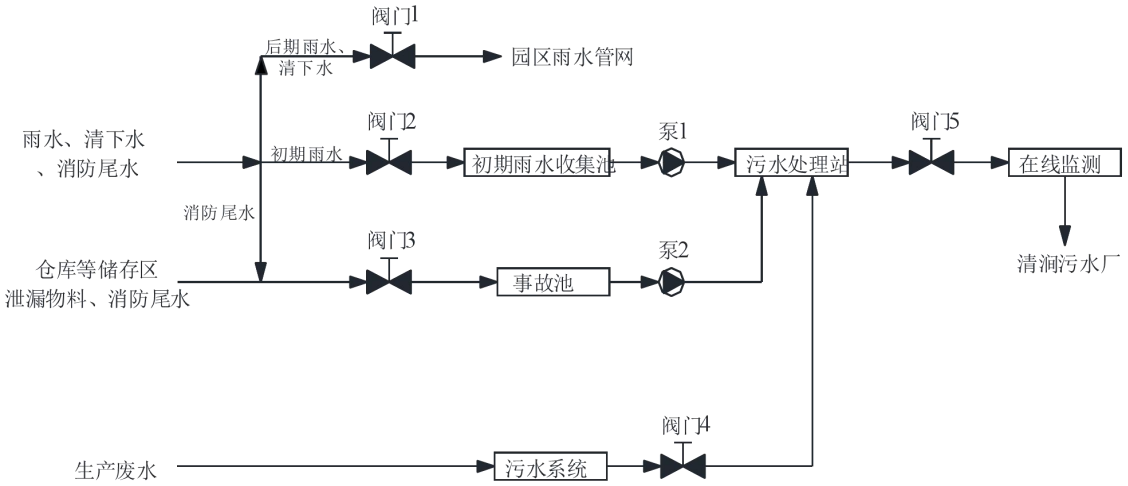

4.3-1

15

4 5 1 2 1 2 3

15 1 3 2

1

15 1 2 3

1 2

3

2

448m³

319m³

(2)

GB30077-2013

4.3.2

4.3.2.1

1

AFTOX

4.3-5

4.3-5

		118.8726925E	
		33.3134947N	
	m/s	1.5	2.56
		25	16
	%	50	73
		F	E
	m	1	
	m	/	

2

AFTOX

4.3-6

4.3-7

4.3-1

4.3-6

	-1 mg/m³	-2 mg/m³
	770	110

4.3-7

m				
	(min)	mg/m³	(min)	mg/m³
10.00	0.10	0.00	0.05	0.21
60.00	0.60	122.32	0.27	36.41
110.00	1.10	88.72	0.50	19.60
160.00	1.60	58.75	0.72	11.84
210.00	2.11	41.20	0.95	7.95
260.00	2.61	30.50	1.17	5.75
310.00	3.11	23.56	1.40	4.37
360.00	3.61	18.80	1.62	3.46
410.00	4.11	15.40	1.85	2.81
460.00	4.61	12.87	2.07	2.34
510.00	5.11	10.94	2.30	1.98
560.00	5.61	9.43	2.52	1.70
610.00	6.12	8.23	2.75	1.48
660.00	6.62	7.25	2.97	1.30

710.00	7.12	6.45	3.20	1.16
760.00	7.62	5.78	3.42	1.03
810.00	8.12	5.21	3.65	0.93
860.00	8.62	4.73	3.87	0.84
910.00	9.12	4.31	4.10	0.77
960.00	9.63	3.95	4.32	0.70
1010.00	10.13	3.64	4.55	0.65
1060.00	10.63	3.36	4.77	0.60
1110.00	11.13	3.12	5.00	0.55
1160.00	11.63	2.90	5.22	0.52
1210.00	12.13	2.70	5.45	0.48
1260.00	12.63	2.53	5.67	0.45
1310.00	13.13	2.37	5.90	0.42
1360.00	13.64	2.23	6.13	0.40
1410.00	14.14	2.09	6.35	0.37
1460.00	14.64	2.00	6.58	0.35
1510.00	18.14	1.91	6.80	0.34
1560.00	18.64	1.83	7.03	0.32
1610.00	19.14	1.75	7.25	0.31
1660.00	19.64	1.69	7.48	0.30
1710.00	20.14	1.62	7.70	0.29
1760.00	20.65	1.56	7.93	0.27
1810.00	21.15	1.50	8.15	0.26
1860.00	21.65	1.45	8.38	0.25
1910.00	22.15	1.40	8.60	0.25
1960.00	23.65	1.35	8.83	0.24
2010.00	24.15	1.31	9.05	0.23
2060.00	24.65	1.27	9.28	0.22
2110.00	25.16	1.23	9.50	0.21
2160.00	25.66	1.19	9.73	0.21
2210.00	26.16	1.16	9.95	0.20
2260.00	26.66	1.12	10.18	0.19
2310.00	27.16	1.09	10.40	0.19
2360.00	27.66	1.06	10.63	0.18
2410.00	28.16	1.03	10.85	0.18
2460.00	28.66	1.00	11.08	0.17
2510.00	29.17	0.98	11.30	0.17
2560.00	29.67	0.95	11.53	0.16
2610.00	30.17	0.93	11.76	0.16
2660.00	30.67	0.90	11.98	0.16
2710.00	32.17	0.88	12.21	0.15
2760.00	32.67	0.86	12.43	0.15
2810.00	33.17	0.84	12.66	0.14
2860.00	33.67	0.82	12.88	0.14
2910.00	34.18	0.80	13.11	0.14
2960.00	34.68	0.79	13.33	0.13
3010.00	35.18	0.77	13.56	0.13
3060.00	35.68	0.75	13.78	0.13
3110.00	36.18	0.74	14.01	0.13

3160.00	36.68	0.72	14.23	0.12
3210.00	37.18	0.71	14.46	0.12
3260.00	37.69	0.69	14.68	0.12
3310.00	38.19	0.68	14.91	0.12
3360.00	39.69	0.66	20.13	0.11
3410.00	40.19	0.65	20.36	0.11
3460.00	40.69	0.64	20.58	0.11
3510.00	41.19	0.63	20.81	0.11
3560.00	41.69	0.62	21.03	0.10
3610.00	42.19	0.60	21.26	0.10
3660.00	42.70	0.59	21.48	0.10
3710.00	43.20	0.58	21.71	0.10
3760.00	43.70	0.57	21.93	0.10
3810.00	44.20	0.56	22.16	0.10
3860.00	44.70	0.55	22.39	0.09
3910.00	45.20	0.54	23.61	0.09
3960.00	45.70	0.53	23.84	0.09
4010.00	46.20	0.53	24.06	0.09
4060.00	46.71	0.52	24.29	0.09
4110.00	47.21	0.51	24.51	0.09
4160.00	47.71	0.50	24.74	0.08
4210.00	49.21	0.49	24.96	0.08
4260.00	49.71	0.48	25.19	0.08
4310.00	50.21	0.48	25.41	0.08
4360.00	50.71	0.47	25.64	0.08
4410.00	51.22	0.46	25.86	0.08
4460.00	51.72	0.46	26.09	0.08
4510.00	52.22	0.45	26.31	0.08
4560.00	52.72	0.44	26.54	0.07
4610.00	53.22	0.44	26.76	0.07
4660.00	53.72	0.43	26.99	0.07
4710.00	54.22	0.42	27.21	0.07
4760.00	54.72	0.42	28.44	0.07
4810.00	55.23	0.41	28.66	0.07
4860.00	55.73	0.41	28.89	0.07
4910.00	56.23	0.40	29.11	0.07
4960.00	56.73	0.40	29.34	0.07

氨水：AMMONIA(29%)：1336-21-6最大影响区域图
气象:风向/风速/稳定度
N/1.00/稳定
各阈值的影响区域对应的位置
阈值(mg/m3) X起点(m) X终点(m) 最大半宽(m) 最大半宽对应X(m)
1.10E+02 80 80 2 80
7.70E+02 此阈值及以上，无对应位置，因计算浓度均小于此阈值
N
80 m
40 m
W
E
S

4.3-8

4.3-8 mg/m³

		km		5min	10min	15min	20min	25min	30min		5min	10min	15min	20min	25min	30min
			| (min)							| (min)						
1		2974	0.000018|30	0	0	0	0	0	0.000018	0.009734|15	0	0	0.009734	0.009734	0.00972	0.000124
2		2628	0.514865|30	0	0	0	0	0.035158	0.514865	0.135699|15	0	0	0.135699	0.135693	0.13415	0.00008
3		2848	0.430201|30	0	0	0	0	0.000007	0.430201	0.12952|15	0	0	0.12952	0.129514	0.129485	0.008485
4		2433	0.222208|30	0	0	0	0	0.015174	0.222208	0.109858|15	0	0	0.109858	0.109853	0.108604	0.000064
5		2729	0.000001|30	0	0	0	0	0	0.000001	0.01139|15	0	0	0.01139	0.011389	0.011389	0.005338
6		1647	0.0|30	0	0	0	0	0	0	0.0|15	0	0	0	0	0	0
7		2228	0.000152|30	0	0	0	0	0.000018	0.000152	0.017803|15	0	0	0.017803	0.017801	0.017632	0.000011
8		2234	0.0|30	0	0	0	0	0	0	0.00045|15	0	0	0.00045	0.00045	0.00045	0.000021
9		2031	0.0|30	0	0	0	0	0	0	0.0|15	0	0	0	0	0	0
10		1434	0.0|30	0	0	0	0	0	0	0.0|15	0	0	0	0	0	0
11		3016	0.0|30	0	0	0	0	0	0	0.002683|25	0	0	0	0.002614	0.002683	0.002641
12		1324	0.0|30	0	0	0	0	0	0	0.0|25	0	0	0	0	0	0
13		2430	0.0|30	0	0	0	0	0	0	0.000003|15	0	0	0.000003	0.000003	0.000003	0.000002
14		3516	0.0|30	0	0	0	0	0	0	0.082599|25	0	0	0	0.079409	0.082599	0.08191
15		3962	0.0|30	0	0	0	0	0	0	0.044743|25	0	0	0	0.039483	0.044743	0.04462
16		4214	0.0|30	0	0	0	0	0	0	0.000001|10	0	0.000001	0.000001	0.000001	0.000001	0
17		1677	0.0|30	0	0	0	0	0	0	0.0|10	0	0	0	0	0	0
18		4607	0.0|30	0	0	0	0	0	0	0.0|10	0	0	0	0	0	0
19		3279	0.0|30	0	0	0	0	0	0	0.0|10	0	0	0	0	0	0
20		2423	0.0|30	0	0	0	0	0	0	0.0|10	0	0	0	0	0	0

-1 -2

80m -1 -2

ERG2000 “ 30m
200m 200m 60m 500m 1100m ”
ERG2000 30m
200m 200m 60m 500m 1100m

4.3.2.2

(1)

SLAB

4.3-9

4.3-9

		118.8724565E	
		33.314711N	
	m/s	1.5	2.56
		25	16
	%	50	73
		F	E
	m	0.03	
	m	/	

(2)

4.3-10

4.3-11

4.3-10

	-1 mg/m³	-2 mg/m³
	150	33

4.3-11

m										
	(min)	mg/m³	m	(min)	mg/m³	(min)	mg/m³	m	(min)	mg/m³
10.00	104.00	0.00	0.00	5.00	0.00	104.01	0.00	0.00	5.01	0.00
60.00	104.02	0.00	0.00	5.02	0.00	104.03	0.00	0.00	5.03	0.00
110.00	104.04	0.00	0.00	5.04	0.00	104.06	0.00	0.00	5.06	0.00
160.00	104.05	0.00	0.00	5.05	0.00	104.09	0.00	0.00	5.09	0.00
210.00	104.07	0.00	0.00	5.07	0.00	104.12	0.00	0.00	5.12	0.00
260.00	104.09	0.00	0.00	5.09	0.00	104.14	0.00	0.00	5.14	0.00
310.00	104.11	0.00	0.00	5.11	0.00	104.17	0.00	0.00	5.17	0.00
360.00	104.12	0.00	0.00	5.12	0.00	104.20	0.00	0.00	5.20	0.00
410.00	104.14	0.00	0.00	5.14	0.00	104.23	0.00	0.00	5.23	0.00
460.00	104.16	0.00	0.00	5.16	0.00	104.26	0.00	0.00	5.26	0.00
510.00	104.17	0.00	0.00	5.17	0.00	104.28	0.00	0.00	5.28	0.00
560.00	104.19	0.00	0.00	5.19	0.00	104.31	0.00	0.00	5.31	0.00
610.00	104.21	0.00	0.00	5.21	0.00	104.34	0.00	0.00	5.34	0.00
660.00	104.23	0.00	0.00	5.23	0.00	104.37	0.00	0.00	5.37	0.00
710.00	104.24	0.00	0.00	5.24	0.00	104.40	0.00	0.00	5.40	0.00
760.00	104.26	0.00	0.00	5.26	0.00	104.42	0.00	0.00	5.42	0.00
810.00	104.28	0.00	0.00	5.28	0.00	104.45	0.00	0.00	5.45	0.00
860.00	104.29	0.00	0.00	5.29	0.00	104.48	0.00	0.00	5.48	0.00
910.00	104.31	0.00	0.00	5.31	0.00	104.51	0.00	0.00	5.51	0.00
960.00	104.33	0.00	0.00	5.33	0.00	104.53	0.00	0.00	5.53	0.00
1010.00	104.34	0.00	0.00	5.34	0.00	104.56	0.00	0.00	5.56	0.00
1060.00	104.36	0.00	0.00	5.36	0.00	104.59	0.00	0.00	5.59	0.00
1110.00	104.38	0.00	0.00	5.38	0.00	104.62	0.00	0.00	5.62	0.00
1160.00	104.40	0.00	0.00	5.40	0.00	104.65	0.00	0.00	5.65	0.00
1210.00	104.41	0.00	0.00	5.41	0.00	104.67	0.00	0.00	5.67	0.00
1260.00	104.43	0.00	0.00	5.43	0.00	104.70	0.00	0.00	5.70	0.00
1310.00	104.45	0.00	0.00	5.45	0.00	104.73	0.00	0.00	5.73	0.00

m										
	(min)	mg/m³	m	(min)	mg/m³	(min)	mg/m³	m	(min)	mg/m³
1360.00	104.46	0.00	0.00	5.46	0.00	104.76	0.00	0.00	5.76	0.00
1410.00	104.48	0.00	0.00	5.48	0.00	104.79	0.00	0.00	5.79	0.00
1460.00	104.50	0.00	0.00	5.50	0.00	104.81	0.00	0.00	5.81	0.00
1510.00	104.52	0.00	0.00	5.52	0.00	104.84	0.00	0.00	5.84	0.00
1560.00	104.53	0.00	0.00	5.53	0.00	104.87	0.00	0.00	5.87	0.00
1610.00	104.55	0.00	0.00	5.55	0.00	104.90	0.00	0.00	5.90	0.00
1660.00	104.57	0.00	0.00	5.57	0.00	104.93	0.00	0.00	5.93	0.00
1710.00	104.58	0.00	0.00	5.58	0.00	104.95	0.00	0.00	5.95	0.00
1760.00	104.60	0.00	0.00	5.60	0.00	104.98	0.00	0.00	5.98	0.00
1810.00	104.62	0.00	0.00	5.62	0.00	105.01	0.00	0.00	6.01	0.00
1860.00	104.64	0.00	0.00	5.64	0.00	105.04	0.00	0.00	6.04	0.00
1910.00	104.65	0.00	0.00	5.65	0.00	105.06	0.00	0.00	6.06	0.00
1960.00	104.67	0.00	0.00	5.67	0.00	105.09	0.00	0.00	6.09	0.00
2010.00	104.69	0.00	0.00	5.69	0.00	105.12	0.00	0.00	6.12	0.00
2060.00	104.70	0.00	0.00	5.70	0.00	105.15	0.00	0.00	6.15	0.00
2110.00	104.72	0.00	0.00	5.72	0.00	105.18	0.00	0.00	6.18	0.00
2160.00	104.74	0.00	0.00	5.74	0.00	105.20	0.00	0.00	6.20	0.00
2210.00	104.76	0.00	0.00	5.76	0.00	105.23	0.00	0.00	6.23	0.00
2260.00	104.77	0.00	0.00	5.77	0.00	105.26	0.00	0.00	6.26	0.00
2310.00	104.79	0.00	0.00	5.79	0.00	105.29	0.00	0.00	6.29	0.00
2360.00	104.81	0.00	0.00	5.81	0.00	105.32	0.00	0.00	6.32	0.00
2410.00	104.82	0.00	0.00	5.82	0.00	105.34	0.00	0.00	6.34	0.00
2460.00	104.84	0.00	0.00	5.84	0.00	105.37	0.00	0.00	6.37	0.00
2510.00	104.86	0.00	0.00	5.86	0.00	105.40	0.00	0.00	6.40	0.00
2560.00	104.87	0.00	0.00	5.87	0.00	105.43	0.00	0.00	6.43	0.00
2610.00	104.89	0.00	0.00	5.89	0.00	105.45	0.00	0.00	6.45	0.00
2660.00	104.91	0.00	0.00	5.91	0.00	105.48	0.00	0.00	6.48	0.00
2710.00	104.93	0.00	0.00	5.93	0.00	105.51	0.00	0.00	6.51	0.00

m										
	(min)	mg/m³	m	(min)	mg/m³	(min)	mg/m³	m	(min)	mg/m³
2760.00	104.94	0.00	0.00	5.94	0.00	105.54	0.00	0.00	6.54	0.00
2810.00	104.96	0.00	0.00	5.96	0.00	105.57	0.00	0.00	6.57	0.00
2860.00	104.98	0.00	0.00	5.98	0.00	105.59	0.00	0.00	6.59	0.00
2910.00	104.99	0.00	0.00	5.99	0.00	105.62	0.00	0.00	6.62	0.00
2960.00	105.01	0.00	0.00	6.01	0.00	105.65	0.00	0.00	6.65	0.00
3010.00	105.03	0.00	0.00	6.03	0.00	105.68	0.00	0.00	6.68	0.00
3060.00	105.05	0.00	0.00	6.05	0.00	105.71	0.00	0.00	6.71	0.00
3110.00	105.06	0.00	0.00	6.06	0.00	105.73	0.00	0.00	6.73	0.00
3160.00	105.08	0.00	0.00	6.08	0.00	105.76	0.00	0.00	6.76	0.00
3210.00	105.10	0.00	0.00	6.10	0.00	105.79	0.00	0.00	6.79	0.00
3260.00	105.11	0.00	0.00	6.11	0.00	105.82	0.00	0.00	6.82	0.00
3310.00	105.13	0.00	0.00	6.13	0.00	105.85	0.00	0.00	6.85	0.00
3360.00	105.15	0.00	0.00	6.15	0.00	105.87	0.00	0.00	6.87	0.00
3410.00	105.17	0.00	0.00	6.17	0.00	105.90	0.00	0.00	6.90	0.00
3460.00	105.18	0.00	0.00	6.18	0.00	105.93	0.00	0.00	6.93	0.00
3510.00	105.20	0.00	0.00	6.20	0.00	105.96	0.00	0.00	6.96	0.00
3560.00	105.22	0.00	0.00	6.22	0.00	105.98	0.00	0.00	6.98	0.00
3610.00	105.23	0.00	0.00	6.23	0.00	106.01	0.00	0.00	7.01	0.00
3660.00	105.25	0.00	0.00	6.25	0.00	106.04	0.00	0.00	7.04	0.00
3710.00	105.27	0.00	0.00	6.27	0.00	106.07	0.00	0.00	7.07	0.00
3760.00	105.29	0.00	0.00	6.29	0.00	106.10	0.00	0.00	7.10	0.00
3810.00	105.30	0.00	0.00	6.30	0.00	106.12	0.00	0.00	7.12	0.00
3860.00	105.32	0.00	0.00	6.32	0.00	106.15	0.00	0.00	7.15	0.00
3910.00	105.34	0.00	0.00	6.34	0.00	106.18	0.00	0.00	7.18	0.00
3960.00	105.35	0.00	0.00	6.35	0.00	106.21	0.00	0.00	7.21	0.00
4010.00	105.37	0.00	0.00	6.37	0.00	106.24	0.00	0.00	7.24	0.00
4060.00	105.39	0.00	0.00	6.39	0.00	106.26	0.00	0.00	7.26	0.00
4110.00	105.40	0.00	0.00	6.40	0.00	106.29	0.00	0.00	7.29	0.00

m										
	(min)	mg/m³	m	(min)	mg/m³	(min)	mg/m³	m	(min)	mg/m³
4160.00	105.42	0.00	0.00	6.42	0.00	106.32	0.00	0.00	7.32	0.00
4210.00	105.44	0.00	0.00	6.44	0.00	106.35	0.00	0.00	7.35	0.00
4260.00	105.46	0.00	0.00	6.46	0.00	106.37	0.00	0.00	7.37	0.00
4310.00	105.47	0.00	0.00	6.47	0.00	106.40	0.00	0.00	7.40	0.00
4360.00	105.49	0.00	0.00	6.49	0.00	106.43	0.00	0.00	7.43	0.00
4410.00	105.51	0.00	0.00	6.51	0.00	106.46	0.00	0.00	7.46	0.00
4460.00	105.52	0.00	0.00	6.52	0.00	106.49	0.00	0.00	7.49	0.00
4510.00	105.54	0.00	0.00	6.54	0.00	106.51	0.00	0.00	7.51	0.00
4560.00	105.56	0.00	0.00	6.56	0.00	106.54	0.00	0.00	7.54	0.00
4610.00	105.58	0.00	0.00	6.58	0.00	106.57	0.00	0.00	7.57	0.00
4660.00	105.59	0.00	0.00	6.59	0.00	106.60	0.00	0.00	7.60	0.00
4710.00	105.61	0.00	0.00	6.61	0.00	106.63	0.00	0.00	7.63	0.00
4760.00	105.63	0.00	0.00	6.63	0.00	106.65	0.00	0.00	7.65	0.00
4810.00	105.64	0.00	0.00	6.64	0.00	106.68	0.00	0.00	7.68	0.00
4860.00	105.66	0.00	0.00	6.66	0.00	106.71	0.00	0.00	7.71	0.00
4910.00	105.68	0.00	0.00	6.68	0.00	106.74	0.00	0.00	7.74	0.00
4960.00	105.70	0.00	0.00	6.70	0.00	106.77	0.00	0.00	7.77	0.00

4.3-12

4.3-12 mg/m³

		km													
			(min)	5min	10min	15min	20min	25min	30min	(min)	5min	10min	15min	20min	25min	30min
1		2974	0.0|5	0	0	0	0	0	0	0.0|5	0	0	0	0	0	0
2		2628	0.0|5	0	0	0	0	0	0	0.0|5	0	0	0	0	0	0
3		2848	0.0|5	0	0	0	0	0	0	0.0|5	0	0	0	0	0	0
4		2433	0.0|5	0	0	0	0	0	0	0.0|5	0	0	0	0	0	0
5		2729	0.0|5	0	0	0	0	0	0	0.0|5	0	0	0	0	0	0
6		1647	0.0|5	0	0	0	0	0	0	0.0|5	0	0	0	0	0	0
7		2228	0.0|5	0	0	0	0	0	0	0.0|5	0	0	0	0	0	0
8		2234	0.0|5	0	0	0	0	0	0	0.0|5	0	0	0	0	0	0
9		2031	0.0|5	0	0	0	0	0	0	0.0|5	0	0	0	0	0	0
10		1434	0.0|5	0	0	0	0	0	0	0.0|5	0	0	0	0	0	0
11		3016	0.0|5	0	0	0	0	0	0	0.0|5	0	0	0	0	0	0
12		1324	0.0|5	0	0	0	0	0	0	0.0|5	0	0	0	0	0	0
13		2430	0.0|5	0	0	0	0	0	0	0.0|5	0	0	0	0	0	0
14		3516	0.0|5	0	0	0	0	0	0	0.0|5	0	0	0	0	0	0
15		3962	0.0|5	0	0	0	0	0	0	0.0|5	0	0	0	0	0	0
16		4214	0.0|5	0	0	0	0	0	0	0.0|5	0	0	0	0	0	0
17		1677	0.0|5	0	0	0	0	0	0	0.0|5	0	0	0	0	0	0
18		4607	0.0|5	0	0	0	0	0	0	0.0|5	0	0	0	0	0	0
19		3279	0.0|5	0	0	0	0	0	0	0.0|5	0	0	0	0	0	0
20		2423	0.0|5	0	0	0	0	0	0	0.0|5	0	0	0	0	0	0

-1

-2 ERG2000

30m 200m 600m; 185m

1600m 4300m

4.3.2.3

(1)

SLAB

4.3-13

4.3-13

		118.868158956E	
		33.316753557N	
	m/s	1.5	2.56
		25	16
	%	50	73
		F	E
	m	0.03	
	m	/	

(2)

4.3-14

4.3-15

4.3-14

	-1 mg/m³	-2 mg/m³
	14000	2100

4.3-15

m										
	(min)	mg/m³	m	(min)	mg/m³	(min)	mg/m³	m	(min)	mg/m³
10.00	8.20	0.00	0.00	8.20	31164.00	7.67	113.14	0.00	7.67	47780.00
60.00	11.69	143.87	0.00	11.69	4316.00	8.53	1413.30	0.00	8.53	6906.00
110.00	16.16	375.07	0.00	15.16	2468.20	9.38	1377.50	0.00	9.38	3059.40
160.00	17.78	551.10	0.00	17.78	1469.90	10.23	1086.40	0.00	10.23	1829.80
210.00	19.14	589.42	0.00	20.14	1064.90	11.09	852.84	0.00	11.09	1252.10
260.00	21.33	558.59	0.00	22.33	828.82	11.94	684.32	0.00	11.94	923.78
310.00	23.39	508.02	0.00	24.39	672.41	12.80	560.49	0.00	12.80	716.96
360.00	25.36	455.98	0.00	26.36	561.28	13.65	469.29	0.00	13.65	576.65
410.00	27.25	407.56	0.00	28.25	476.22	14.52	397.92	0.00	14.52	475.74
460.00	29.08	365.31	0.00	30.08	411.53	15.31	393.42	0.00	15.31	393.42
510.00	29.85	328.63	0.00	31.85	358.82	15.97	318.29	0.00	15.97	318.29
560.00	31.58	297.32	0.00	33.58	317.02	16.61	261.47	0.00	16.61	261.47
610.00	33.27	269.77	0.00	35.27	281.47	17.24	223.16	0.00	17.24	223.16
660.00	34.92	245.86	0.00	36.92	251.93	17.86	195.86	0.00	17.86	195.86
710.00	36.54	225.12	0.00	38.54	227.47	18.47	171.31	0.00	18.47	171.31
760.00	38.13	205.70	0.00	40.13	205.70	19.07	151.83	0.00	19.07	151.83
810.00	40.69	187.02	0.00	41.69	187.02	19.66	136.33	0.00	19.66	136.33
860.00	42.22	171.07	0.00	43.22	171.07	20.23	122.36	0.00	20.23	122.36
910.00	44.73	157.27	0.00	44.73	157.27	20.80	110.55	0.00	20.80	110.55
960.00	46.23	144.53	0.00	46.23	144.53	21.37	100.69	0.00	21.37	100.69
1010.00	47.70	133.35	0.00	47.70	133.35	21.92	92.43	0.00	21.92	92.43
1060.00	49.15	123.55	0.00	49.15	123.55	22.47	84.70	0.00	22.47	84.70
1110.00	50.58	114.94	0.00	50.58	114.94	23.02	77.89	0.00	23.02	77.89
1160.00	52.00	107.18	0.00	52.00	107.18	23.55	71.99	0.00	23.55	71.99
1210.00	53.41	99.86	0.00	53.41	99.86	24.09	66.87	0.00	24.09	66.87
1260.00	54.80	93.29	0.00	54.80	93.29	24.61	62.42	0.00	24.61	62.42
1310.00	56.17	87.40	0.00	56.17	87.40	25.14	58.18	0.00	25.14	58.18
1360.00	57.54	82.12	0.00	57.54	82.12	25.66	54.28	0.00	25.66	54.28

m										
	(min)	mg/m³	m	(min)	mg/m³	(min)	mg/m³	m	(min)	mg/m³
1410.00	58.88	77.38	0.00	58.88	77.38	26.17	50.80	0.00	26.17	50.80
1460.00	60.22	73.06	0.00	60.22	73.06	26.68	47.70	0.00	26.68	47.70
1510.00	61.55	68.84	0.00	61.55	68.84	27.19	44.92	0.00	27.19	44.92
1560.00	62.86	64.97	0.00	62.86	64.97	27.69	42.44	0.00	27.69	42.44
1610.00	64.17	61.44	0.00	64.17	61.44	28.19	40.17	0.00	28.19	40.17
1660.00	65.46	58.22	0.00	65.46	58.22	28.69	37.92	0.00	28.69	37.92
1710.00	66.75	55.27	0.00	66.75	55.27	29.18	35.85	0.00	29.18	35.85
1760.00	68.02	52.58	0.00	68.02	52.58	29.67	33.96	0.00	29.67	33.96
1810.00	69.29	50.12	0.00	69.29	50.12	30.16	32.24	0.00	30.16	32.24
1860.00	70.55	47.80	0.00	70.55	47.80	30.64	30.66	0.00	30.64	30.66
1910.00	71.80	45.50	0.00	71.80	45.50	31.12	29.23	0.00	31.12	29.23
1960.00	73.04	43.36	0.00	73.04	43.36	31.60	27.91	0.00	31.60	27.91
2010.00	74.28	41.37	0.00	74.28	41.37	32.07	26.71	0.00	32.07	26.71
2060.00	75.50	39.53	0.00	75.50	39.53	32.55	25.50	0.00	32.55	25.50
2110.00	76.72	37.82	0.00	76.72	37.82	33.02	24.34	0.00	33.02	24.34
2160.00	77.94	36.24	0.00	77.94	36.24	33.49	23.26	0.00	33.49	23.26
2210.00	79.14	34.77	0.00	79.14	34.77	33.95	22.26	0.00	33.95	22.26
2260.00	80.34	33.40	0.00	80.34	33.40	34.42	21.33	0.00	34.42	21.33
2310.00	81.53	32.14	0.00	81.53	32.14	34.88	20.46	0.00	34.88	20.46
2360.00	82.72	30.91	0.00	82.72	30.91	35.34	19.66	0.00	35.34	19.66
2410.00	83.90	29.68	0.00	83.90	29.68	35.80	18.91	0.00	35.80	18.91
2460.00	85.08	28.52	0.00	85.08	28.52	36.25	18.21	0.00	36.25	18.21
2510.00	86.25	27.43	0.00	86.25	27.43	36.71	17.56	0.00	36.71	17.56
2560.00	87.41	26.40	0.00	87.41	26.40	37.16	16.95	0.00	37.16	16.95
2610.00	88.57	25.43	0.00	88.57	25.43	37.61	16.31	0.00	37.61	16.31
2660.00	89.72	24.52	0.00	89.72	24.52	38.06	15.71	0.00	38.06	15.71
2710.00	90.87	23.67	0.00	90.87	23.67	38.50	15.14	0.00	38.50	15.14
2760.00	92.01	22.86	0.00	92.01	22.86	38.95	14.60	0.00	38.95	14.60
2810.00	93.15	22.11	0.00	93.15	22.11	39.39	14.09	0.00	39.39	14.09

m										
	(min)	mg/m³	m	(min)	mg/m³	(min)	mg/m³	m	(min)	mg/m³
2860.00	94.28	21.40	0.00	94.28	21.40	39.84	13.62	0.00	39.84	13.62
2910.00	95.41	20.74	0.00	95.41	20.74	40.28	13.16	0.00	40.28	13.16
2960.00	96.53	20.11	0.00	96.53	20.11	40.71	12.74	0.00	40.71	12.74
3010.00	97.65	19.47	0.00	97.65	19.47	41.15	12.34	0.00	41.15	12.34
3060.00	98.77	18.83	0.00	98.77	18.83	41.59	11.96	0.00	41.59	11.96
3110.00	99.88	18.23	0.00	99.88	18.23	42.02	11.60	0.00	42.02	11.60
3160.00	100.98	17.65	0.00	100.98	17.65	42.45	11.27	0.00	42.45	11.27
3210.00	102.08	17.10	0.00	102.08	17.10	42.89	10.95	0.00	42.89	10.95
3260.00	103.18	16.58	0.00	103.18	16.58	43.32	10.63	0.00	43.32	10.63
3310.00	104.28	16.09	0.00	104.28	16.09	43.75	10.31	0.00	43.75	10.31
3360.00	105.37	15.62	0.00	105.37	15.62	44.17	10.00	0.00	44.17	10.00
3410.00	106.45	15.17	0.00	106.45	15.17	44.60	9.70	0.00	44.60	9.70
3460.00	107.53	14.74	0.00	107.53	14.74	45.03	9.42	0.00	45.03	9.42
3510.00	108.61	14.34	0.00	108.61	14.34	45.45	9.15	0.00	45.45	9.15
3560.00	109.69	13.96	0.00	109.69	13.96	45.87	8.89	0.00	45.87	8.89
3610.00	110.76	13.59	0.00	110.76	13.59	46.30	8.64	0.00	46.30	8.64
3660.00	111.83	13.24	0.00	111.83	13.24	46.72	8.41	0.00	46.72	8.41
3710.00	112.89	12.91	0.00	112.89	12.91	47.14	8.19	0.00	47.14	8.19
3760.00	113.95	12.60	0.00	113.95	12.60	47.56	7.97	0.00	47.56	7.97
3810.00	115.01	12.28	0.00	115.01	12.28	47.97	7.77	0.00	47.97	7.77
3860.00	116.06	11.95	0.00	116.06	11.95	48.39	7.58	0.00	48.39	7.58
3910.00	117.11	11.64	0.00	117.11	11.64	48.80	7.39	0.00	48.80	7.39
3960.00	118.16	11.33	0.00	118.16	11.33	49.22	7.22	0.00	49.22	7.22
4010.00	119.21	11.04	0.00	119.21	11.04	49.63	7.05	0.00	49.63	7.05
4060.00	120.25	10.77	0.00	120.25	10.77	50.04	6.89	0.00	50.04	6.89
4110.00	121.29	10.50	0.00	121.29	10.50	50.45	6.73	0.00	50.45	6.73
4160.00	122.33	10.24	0.00	122.33	10.24	50.87	6.57	0.00	50.87	6.57
4210.00	123.36	9.99	0.00	123.36	9.99	51.27	6.40	0.00	51.27	6.40
4260.00	124.39	9.76	0.00	124.39	9.76	51.68	6.25	0.00	51.68	6.25

m										
	(min)	mg/m³	m	(min)	mg/m³	(min)	mg/m³	m	(min)	mg/m³
4310.00	125.42	9.53	0.00	125.42	9.53	52.09	6.10	0.00	52.09	6.10
4360.00	126.44	9.31	0.00	126.44	9.31	52.50	5.95	0.00	52.50	5.95
4410.00	127.47	9.10	0.00	127.47	9.10	52.90	5.81	0.00	52.90	5.81
4460.00	128.48	8.90	0.00	128.48	8.90	53.31	5.68	0.00	53.31	5.68
4510.00	129.50	8.71	0.00	129.50	8.71	53.71	5.55	0.00	53.71	5.55
4560.00	130.51	8.52	0.00	130.51	8.52	54.12	5.43	0.00	54.12	5.43
4610.00	131.53	8.35	0.00	131.53	8.35	54.52	5.31	0.00	54.52	5.31
4660.00	132.53	8.18	0.00	132.53	8.18	54.92	5.19	0.00	54.92	5.19
4710.00	133.54	8.01	0.00	133.54	8.01	55.32	5.08	0.00	55.32	5.08
4760.00	134.54	7.86	0.00	134.54	7.86	55.72	4.98	0.00	55.72	4.98
4810.00	135.54	7.71	0.00	135.54	7.71	56.12	4.87	0.00	56.12	4.87
4860.00	136.54	7.54	0.00	136.54	7.54	56.52	4.77	0.00	56.52	4.77
4910.00	137.54	7.38	0.00	137.54	7.38	56.92	4.68	0.00	56.92	4.68
4960.00	138.54	7.22	0.00	138.54	7.22	57.31	4.59	0.00	57.31	4.59

4.3-16

4.3-16 mg/m³

		km													
			| (min)	5min	10min	15min	20min	25min	30min	| (min)	5min	10min	15min	20min	25min	30min
1		2974	0.0|5	0	0	0	0	0	0	0.0|5	0	0	0	0	0	0
2		2628	0.0|5	0	0	0	0	0	0	0.0|5	0	0	0	0	0	0
3		2848	0.0|5	0	0	0	0	0	0	0.0|5	0	0	0	0	0	0
4		2433	0.0|5	0	0	0	0	0	0	0.0|5	0	0	0	0	0	0
5		2729	0.0|5	0	0	0	0	0	0	0.0|5	0	0	0	0	0	0
6		1647	0.0|5	0	0	0	0	0	0	0.0|5	0	0	0	0	0	0

7		2228	0.0|5	0	0	0	0	0	0	0.0|5	0	0	0	0	0	0
8		2234	0.0|5	0	0	0	0	0	0	0.0|5	0	0	0	0	0	0
9		2031	0.0|5	0	0	0	0	0	0	0.0|5	0	0	0	0	0	0
10		1434	0.0|5	0	0	0	0	0	0	0.0|5	0	0	0	0	0	0
11		3016	0.0|5	0	0	0	0	0	0	0.0|5	0	0	0	0	0	0
12		1324	0.0|5	0	0	0	0	0	0	0.0|5	0	0	0	0	0	0
13		2430	0.0|5	0	0	0	0	0	0	0.0|5	0	0	0	0	0	0
14		3516	0.0|5	0	0	0	0	0	0	0.0|5	0	0	0	0	0	0
15		3962	0.0|5	0	0	0	0	0	0	0.0|5	0	0	0	0	0	0
16		4214	0.0|5	0	0	0	0	0	0	0.0|5	0	0	0	0	0	0
17		1677	0.0|5	0	0	0	0	0	0	0.0|5	0	0	0	0	0	0
18		4607	0.0|5	0	0	0	0	0	0	0.0|5	0	0	0	0	0	0
19		3279	0.0|5	0	0	0	0	0	0	0.0|5	0	0	0	0	0	0
20		2423	0.0|5	0	0	0	0	0	0	0.0|5	0	0	0	0	0	0

-1 -2

(HG/T 4690-2014) 1

100m 500m

(3)

a. (1)
(GB/T50493-2019)

(2)

(3)

”

b. (
)

GB30077-2013

c.

4.3.3

4.3.3.1

15m 26.42m^3/s

0 $t_j \leq t_0$

$$C(x,t_j)=\frac{\Delta t}{A\sqrt{4\pi E_x}}\sum_{i=1}^{j}\frac{W_i}{\sqrt{t_j-t_{i-0.5}}}\exp\left[-k(t_j-t_{i-0.5})\right]\exp\left\{-\frac{\left[x-u(t_j-t_{i-0.5})\right]^2}{4E_x(t_j-t_{i-0.5})}\right\}$$

t_j t_0

$$C(x,t_j)=\frac{\Delta t}{A\sqrt{4\pi E_x}}\sum_{i=1}^{n}\frac{W_i}{\sqrt{t_j-t_{i-0.5}}}\exp\left[-k(t_j-t_{i-0.5})\right]\exp\left\{-\frac{\left[x-u(t_j-t_{i-0.5})\right]^2}{4E_x(t_j-t_{i-0.5})}\right\}$$

$C(x,t_j)$—— x t_j mg/L

t_0—— s

t—— s

n—— $n=t_0/t$

$t_{i-0.5}$—— $t_{i-0.5}=(i-0.5)t$ t_0 s

i —— n

j ——

W_i ——t_{i-1} t_i g/s

4.3.2.2

4.3-17

4.3-17

	Q_h	m^3/s	26.42	4.5	
	u	m/s	0.70	0.15	
	i		1:2.5		
	$c_{h\text{-}COD}$	mg/L	19		

4.3-18

	$W_{i\text{-}COD}$	g/s	208.3	COD
	t_0	s	7200	
	K_{COD}	1/d	0.15	COD

4.3.2.3

COD 4.3-19

4.3-19 COD (mg/l)

(m)	1000	2000	3000	4000	5000	6000	7000	8000	9000	10000	11000	12000	13000	14000
500	19.503	20.366	21.069	21.24	21.851	22.386	22.435	22.432	22.032	21.751	21.539	21.369	21.23	21.112
1000	19.19	19.647	20.068	20.48	20.882	21.225	21.564	21.771	21.651	21.499	21.36	21.238	21.13	21.035
1500	19.037	19.24	19.523	19.83	20.134	20.435	20.731	21	21.098	21.091	21.046	20.989	20.929	20.87
2000	19.004	19.076	19.227	19.424	19.644	19.875	20.111	20.346	20.528	20.622	20.66	20.668	20.659	20.64
2500	19	19.019	19.087	19.198	19.34	19.503	19.68	19.864	20.042	20.176	20.266	20.323	20.356	20.373
3000	19	19.004	19.029	19.084	19.167	19.273	19.395	19.531	19.673	19.805	19.913	19.995	20.056	20.1
3500	19	19.001	19.009	19.032	19.076	19.139	19.218	19.311	19.416	19.524	19.625	19.712	19.785	19.844
4000	19	19	19.002	19.011	19.032	19.066	19.114	19.174	19.246	19.326	19.408	19.487	19.558	19.621

3700m

COD≤20mg/L 3630m 3570s

4.3.4

4.3.4.1

RTO RTO

30min RTO

: 2g/min 0.417g/min

15min

(1)

AFTOX

4.3-20

4.3-20

		118.872370E	
		33.315126N	
		RTO	
	m/s	1.5	2.56
		25	16
	%	50	73
		F	E
	m	0.03	
	m	/	

(2)

4.3-21

4.3-22

4.3-21

	-1 mg/m³	-2 mg/m³
	440	81

4.3-22 RTO

m				
	(min)	(mg/m³)	(min)	(mg/m³)
10.00	0.11	2.25	0.07	0.00
60.00	0.67	0.16	0.39	0.02
110.00	1.22	0.07	0.72	0.01
160.00	1.78	0.05	1.04	0.01
210.00	2.33	0.03	1.37	0.01
260.00	2.89	0.02	1.69	0.00
310.00	3.44	0.02	2.02	0.00
360.00	4.00	0.01	2.34	0.00
410.00	4.56	0.01	2.67	0.00
460.00	5.11	0.01	2.99	0.00
510.00	5.67	0.01	3.32	0.00
560.00	6.22	0.01	3.65	0.00
610.00	6.78	0.01	3.97	0.00
660.00	7.33	0.01	4.30	0.00
710.00	7.89	0.00	4.62	0.00
760.00	8.44	0.00	4.95	0.00
810.00	9.00	0.00	5.27	0.00
860.00	9.56	0.00	5.60	0.00
910.00	10.11	0.00	5.92	0.00
960.00	10.67	0.00	6.25	0.00
1010.00	11.22	0.00	6.58	0.00
1060.00	11.78	0.00	6.90	0.00
1110.00	12.33	0.00	7.23	0.00
1160.00	12.89	0.00	7.55	0.00
1210.00	13.44	0.00	7.88	0.00
1260.00	14.00	0.00	8.20	0.00
1310.00	14.56	0.00	8.53	0.00
1360.00	15.11	0.00	8.85	0.00
1410.00	15.67	0.00	9.18	0.00
1460.00	16.22	0.00	9.51	0.00
1510.00	16.78	0.00	9.83	0.00
1560.00	17.33	0.00	10.16	0.00
1610.00	17.89	0.00	10.48	0.00
1660.00	18.44	0.00	10.81	0.00
1710.00	19.00	0.00	11.13	0.00
1760.00	19.56	0.00	11.46	0.00
1810.00	20.11	0.00	11.78	0.00
1860.00	20.67	0.00	12.11	0.00
1910.00	21.22	0.00	12.44	0.00
1960.00	21.78	0.00	12.76	0.00
2010.00	22.33	0.00	13.09	0.00
2060.00	22.89	0.00	13.41	0.00
2110.00	23.44	0.00	13.74	0.00
2160.00	24.00	0.00	14.06	0.00
2210.00	24.56	0.00	14.39	0.00
2260.00	25.11	0.00	14.71	0.00
2310.00	25.67	0.00	15.04	0.00
2360.00	26.22	0.00	15.37	0.00
2410.00	26.78	0.00	15.69	0.00
2460.00	27.33	0.00	16.02	0.00
2510.00	27.89	0.00	16.34	0.00
2560.00	28.44	0.00	16.67	0.00

m	(min)	(mg/m³)	(min)	(mg/m³)
2610.00	29.00	0.00	16.99	0.00
2660.00	29.56	0.00	17.32	0.00
2710.00	34.11	0.00	17.64	0.00
2760.00	34.67	0.00	17.97	0.00
2810.00	35.22	0.00	18.29	0.00
2860.00	35.78	0.00	18.62	0.00
2910.00	36.33	0.00	18.95	0.00
2960.00	36.89	0.00	19.27	0.00
3010.00	37.44	0.00	19.60	0.00
3060.00	39.00	0.00	19.92	0.00
3110.00	39.56	0.00	20.25	0.00
3160.00	40.11	0.00	20.57	0.00
3210.00	40.67	0.00	20.90	0.00
3260.00	41.22	0.00	21.22	0.00
3310.00	41.78	0.00	21.55	0.00
3360.00	42.33	0.00	21.88	0.00
3410.00	42.89	0.00	22.20	0.00
3460.00	43.44	0.00	22.53	0.00
3510.00	44.00	0.00	22.85	0.00
3560.00	44.56	0.00	23.18	0.00
3610.00	45.11	0.00	23.50	0.00
3660.00	45.67	0.00	23.83	0.00
3710.00	46.22	0.00	24.15	0.00
3760.00	46.78	0.00	24.48	0.00
3810.00	47.33	0.00	24.81	0.00
3860.00	47.89	0.00	25.13	0.00
3910.00	49.44	0.00	25.46	0.00
3960.00	50.00	0.00	25.78	0.00
4010.00	50.56	0.00	26.11	0.00
4060.00	51.11	0.00	26.43	0.00
4110.00	51.67	0.00	26.76	0.00
4160.00	52.22	0.00	27.0:0	

4.3-23 mg/m³

		km		5min	10min	15min	20min	25min	30min		5min	10min	15min	20min	25min	30min
			(min)							(min)						
1		2974	0.0|5	0	0	0	0	0	0	0.0|5	0	0	0	0	0	0
2		2628	0.0|5	0	0	0	0	0	0	0.000005|15	0	0	0.000005	0.000005	0.000005	0.000005
3		2848	0.0|5	0	0	0	0	0	0	0.000015|20	0	0	0	0.000015	0.000015	0.000015
4		2433	0.000242|30	0	0	0	0	0	0.000242	0.000127|15	0	0	0.000127	0.000127	0.000127	0.000127
5		2729	0.0|30	0	0	0	0	0	0	0.000046|20	0	0	0	0.000046	0.000046	0.000046
6		1647	0.0|30	0	0	0	0	0	0	0.0|20	0	0	0	0	0	0
7		2228	0.000108|25	0	0	0	0	0.000108	0.000108	0.000105|15	0	0	0.000105	0.000105	0.000105	0.000105
8		2234	0.0|25	0	0	0	0	0	0	0.000002|20	0	0	0	0.000002	0.000002	0.000002
9		2031	0.0|25	0	0	0	0	0	0	0.0|20	0	0	0	0	0	0
10		1434	0.0|25	0	0	0	0	0	0	0.0|20	0	0	0	0	0	0
11		3016	0.0|25	0	0	0	0	0	0	0.000007|25	0	0	0	0	0.000007	0.000007
12		1324	0.0|25	0	0	0	0	0	0	0.0|25	0	0	0	0	0	0
13		2430	0.0|25	0	0	0	0	0	0	0.0|25	0	0	0	0	0	0
14		3516	0.0|25	0	0	0	0	0	0	0.000071|25	0	0	0	0	0.000071	0.000071
15		3962	0.0|25	0	0	0	0	0	0	0.000002|25	0	0	0	0	0.000002	0.000002
16		4214	0.0|25	0	0	0	0	0	0	0.0|25	0	0	0	0	0	0
17		1677	0.0|25	0	0	0	0	0	0	0.0|25	0	0	0	0	0	0
18		4607	0.0|25	0	0	0	0	0	0	0.0|25	0	0	0	0	0	0
19		3279	0.0|25	0	0	0	0	0	0	0.0|25	0	0	0	0	0	0
20		2423	0.0|25	0	0	0	0	0	0	0.0|25	0	0	0	0	0	0

RTO -1

-2

4.3.4.2

COD ≥10000mg/L 44.5m³/d
COD≤500mg/L 4
m³/d, 2.3 m³
0.19%

4.3.5
4.3.5.1
37%
15m³

4.3.2

4.3.5.2

4.3.1

4.3.5.1

4.3.5.3

(1)
< > a.

(

) b.

c.

;d.

(2)

(3)

110 119

(

)

4.3.6

4.3.6.1

2014 9

4.3.6.2

(1) a.

b.

1m

c.

d.

e.

( )

f.

(

)

(2)

(3)

4.4

4.4-1

4.4-1

1		-1 430m -2 1010m , 962m, 360 -1 170m -2 410m ERG2000 “ 30m 200m 200m 125m 600m 1800m ” ERG2000 30m 200m 410m 125m 600m 1800m	/
2		-1 -2 80m -1 -2 ERG2000 “ 30m 200m 200m 60m 500m 1100m ” ERG2000 30m 200m 200m 60m 500m 1100m	
		-1	

		-2 ERG2000 30m 200m 600m; 185m 1600m 4300m	
		-1 -2 (HG/T 4690-2014) 1 100m 500m	/
3		3630m COD	
4		RTO -1 -2	
5			
6			
7			
8			

5.

5.1

5.1.1

(1)

(2)

( )

(3)

5.1.2

(1)

(2)

(3)

(4)

448m³ 14×8
×4.5 4.0m 319m³ 14×7.6
×3.5 3.0m

RTO

(5) 200

5.1.3

1 7
2-3
“ ” “

” “ ”

[2007] 69
(2006.1.24)
(2015.1.8) (2008.6)
(HJ589-2021)

5.1.4

(1)
(2)
1

(3)

5.1.5

“ ”

(1)

“ ”

“ ”

(2)

(3)

(4)

“ “，

5.2

5.2-1

5.2-1

1		1 1 1 (1) COD

		(2) COD (3) RTO
2		(1) (2) (3) (4) 448m³ (5) 319m³ (6)
3		(1) (2)

5.3

GB30077-2023

5.3-1

5.3-1

				1	
					1
					1
				2	
				2	
				2	
				2	
				1	
				6	
				10	
				4	
					2
				1	
				6	
				6	
				2	
				1	
			5Kg	40	
				8	
				35	
				20	
				6	
				6	
				1	
				2	
				2	
				4	
				4	
				4	
				4	
				2	
				10	2
				6	

				3	3
				1	
				1	1
				2	
		COD	GN-CODcr03	1	
				1	
			GN-TN03	1	
			GN-TP03	1	
				1	
		pH	LITI	1	
		VOC		2	
				1	
				6	
				6	
				2	

5.3-2

				15195278510	
				13852391855	
				15895969505	
				18020185896	
				18118251937	
				18662987265	
				18020185896	
				15952319701	
				13770410269	
				18655401386	
				18795812556	
				18852359452	
				19942503233	
				15851711321	
				13776721344	/
				15195502660	/
				15050812849	/
				15949196706	/
				15261758025	/
				13915141548	/
				15195305950	/
				18912055166	

					15189503852	
					15195303040	
					15052657436	
					18118251937	
					13770410269	
					18012088561	
					17851561162	
					18021928026	
					15195307684	
					17150510428	
					13016590107	
					15261758610	
					18662987265	
					13994967990	
	( )				19984949520	/
					15052651376	
					18036531272	
					19984969689	

5.4

5.4.1

(1)

(2)

(3)

(4)

(5)

5.5

4.1.1

5.5-1

1		[2] 8 60 7	(1) (2)
2		[3] ,	(1) (2)
		[4] “ 8.31 ”	
		[5]	(3)
3		[6] “ 7.16 ” 7 2 3	(1) (2)
4		[8]	(1)
5		[11]	
6		[7]	

5.6

5.5-1

5.5-1

1		
2		

` *3* *3-6* *6*

6.

5.5-1

6.1

6.1-1

1		(1)	2024.11	
2		5.3-1	2024.11	

7.

(Q) (M)
(E)

7.1

7.1.1 (Q)

3.3-1 3.3-2
“ ”
(HJ941-2018) A
NH_3-N ≥ 2000mg/L
CODcr ≥ 10000mg/L

7.1-1

(Q) 7.1-1,

$$Q = \frac{w_1}{W_1} + \frac{w_2}{W_2} + \dots\dots\dots\dots + \frac{w_n}{W_n}$$

w_1 w_2 … w_n— t;
W_1 W_2 … W_n— t;

7.1-1 (Q)

		(CAS)		(t)	(t)		Q
	31%	HCl/7647-01-0	-	-	11.8323	26.9938	-
	37%			7.5	9.9136	22.6161	4.3373
		C_2H_6O/64-17-5		500	1.1076	31.0000	0.0642
		CH_5N/124-40-3		5	0.1528	3.0000	0.6306
		CH_2O /50-00-0	-	-	0.1408	3.0000	-
	37%			0.5	0.0521	1.1100	2.3242
		SO_2Cl_2/7791-25-5		5	0.6857	10.1000	2.1571
		NH_3/7664-61-7		5	0.3739	2.0000	0.4748
		C_5H_{12}/8032-32-4		10	0.4517	2.2000	0.2652
		C_3H_6O/67-64-1		10	0.9000	10.0000	1.0900
		C_7H_8/108-88-3		10	0.0060	0.6000	0.0606
		$NCCH_2CN$ 109-77-3		100	0.2000	0.4000	0.0060
		$NaNO_2$/7632-00-0		100	0.2000	2.0000	0.0220

			(CAS)		(t)	(t)		Q
			C_8H_7N /140-29-4		1	0.1386	0.8000	0.9386
			C_6H_5Cl/108-90-7		5	1.2081	2.5000	0.7416
			CH_2Cl_2/75-09-2		10	0.5004	11.0000	1.1500
			$C_2H_4O_2$/64-19-7		10	0.0909	6.0000	0.6091
			-	-	-	0.0120	0.5000	-
		70%	HCl/7647-01-0		0.0084	0.3500	0.0478	0.0478
		30%	CH_4O/67-56-1		0.0036	0.1500	0.0154	0.0108
			$C_4H_8O_2$/141-78-6		10	0.0027	0.2000	0.0203
			CH_4O/67-56-1		10	0.0004	1.0000	0.1000
			$C_3H_5ClO_2$/541-41-3		200	0.0004	0.2000	0.0010
			C_2H_3N/75-05-8		10	0.0002	0.2000	0.0200
			HF/7664-39-3		1	0.0108	1.0000	1.0108
			$C_{19}H_{19}BrP$/1779-49-3		200	0.0027	2.0000	0.0100
			C_2H_6O/64-17-5	-	-	0.1800	5.0000	-
		30%	HCl/7647-01-0		0.0540	1.5000	0.2072	0.2072
		70%	C_2H_6O/64-17-5		0.1260	3.5000	0.0073	0.0073
			H_2SO_4/7664-93-9		10	0.0000	19.2000	1.9200
			-		50	0.0000	120.0000	2.4000
			CH_4/74-82-8		10	0.0000	1.4190	0.1419
								20.7730

(HJ941-2018) Q 1

Q Q≥1 Q

(1)1≤Q 10 Q1 ; (2)10≤Q 100 Q2 ; (3)Q≥100, Q3

7.1-1 Q 20.7730

10≤Q 100 Q2

7.1.2 (M)

(M)

7.1.2.1

(HJ941-2018) “

30 ” 7.1-2

7.1-2

( ) ( )	10/	40
a	5/	5 RTO 760-850 60
b	5/	(2024)
/	0	0
:a. ≥300 GB30000.2 GB30000.13		(p) ≥10.0MPa, b.

“ 30 ” RTO 30

7.1.2.2

(HJ941-2018) 2 70 7.1-3

7.1-3

	(1) A (2) ( )	0	0
		25	
		0	0
		25	
3		20	0
		15	
		10	

		0	
			0

30

7.1.2.3

(HJ941-2018)

7.1-4

7.1-4

M 25	M1
25≤M 45	M2
45≤M 65	M3
M≥65	M4

7.1-3 7.1-4 M 30

M2

7.1.3 (E)

(HJ941-2018) “

5

500m 1

2 3 E1 E2 E3 7.1-5 ”

1 2 3

7.1-5

1 (E1)	(1) 5 5 500 1000 5
2 (E2)	(1) 5 1 5 500 500 1000
3 (E3)	(1) 5 1 500 500

3.2-1 5 10.612

500 2355

E1

7.1.4

(HJ941-2018) “

(E)

(Q) (M), 7.1-6

7.1-6

(E)	(Q)	(M)			
		M1	M2	M3	M4
1 (E1)	1≤Q 10(Q1)				
	10≤Q 100(Q2)				
	100≤Q(Q3)				
2 (E2)	1≤Q 10(Q1)				
	10≤Q 100(Q2)				
	100≤Q(Q3)				
3 (E3)	1≤Q 10(Q1)				
	10≤Q 100(Q2)				
	100≤Q(Q3)				

7.1-1 Q 20.7730 10≤Q 100 , Q2 7.1-4 30 M2 7.1-5 E1 “ - (Q2-M2-E1) ”

7.2

7.2.1 (Q)

3.3-1 3.3-2 “ ”

(HJ941-2018) A

( ) Q

7.2-1,

$$Q=\frac{q_1}{Q_1}+\frac{q_2}{Q_2}+.....+\frac{q_n}{Q_n}$$

q_1 q_2 … q_n— t;

Q_1 Q_2 … Q_n— t;

7.2-1 (Q)

		(CAS)		(t)	(t)		Q
		$(CH_2O)n$/30525-89-4		1	0.3784	6.0000	6.3784
	31%	HCl/7647-01-0	-	-	11.8323	26.9938	-
	37%			7.5	9.9136	22.6161	4.3373
		C_2H_6O/64-17-5		500	1.1076	31.0000	0.0642
		CH_5N/124-40-3		5	0.1528	3.0000	0.6306
		CH_2O /50-00-0	-	-	0.1408	3.0000	-
	37%			0.5	0.0521	1.1100	2.3242
		SO_2Cl_2/7791-25-5		5	0.6857	10.1000	2.1571
		NH_3/7664-61-7		5	0.3739	2.0000	0.4748
		C_5H_{12}/8032-32-4		10	0.4517	2.2000	0.2652
		C_3H_6O/67-64-1		10	0.9000	10.0000	1.0900
		C_7H_8/108-88-3		10	0.0060	0.6000	0.0606
		$NCCH_2CN$ 109-77-3		100	0.2000	0.4000	0.0060
		$NaNO_2$/7632-00-0		100	0.2000	2.0000	0.0220
		C_8H_7N /140-29-4		1	0.1386	0.8000	0.9386
		C_6H_5Cl/108-90-7		5	1.2081	2.5000	0.7416
		CH_2Cl_2/75-09-2		10	0.5004	11.0000	1.1500
		$C_2H_4O_2$/64-19-7		10	0.0909	6.0000	0.6091
		-	-	-	0.0120	0.5000	-
	70%	HCl/7647-01-0		0.0084	0.3500	0.0478	0.0478
	30%	CH_4O/67-56-1		0.0036	0.1500	0.0154	0.0108
		$C_4H_8O_2$/141-78-6		10	0.0027	0.2000	0.0203
		CH_4O/67-56-1		10	0.0004	1.0000	0.1000
		$C_3H_5ClO_2$/541-41-3		200	0.0004	0.2000	0.0010
		C_2H_3N/75-05-8		10	0.0002	0.2000	0.0200
		HF/7664-39-3		1	0.0108	1.0000	1.0108
		$C_{19}H_{19}BrP$/1779-49-3		200	0.0027	2.0000	0.0100
		C_2H_6O/64-17-5	-	-	0.1800	5.0000	-
	30%	HCl/7647-01-0		0.0540	1.5000	0.2072	0.2072
	70%	C_2H_6O/64-17-5		0.1260	3.5000	0.0073	0.0073
		H_2SO_4/7664-93-9		10	0.0000	19.2000	1.9200
		-		50	0.0000	120.0000	2.4000

		(CAS)		(t)	(t)		Q
	(COD ≥ 10000mg/L NH_3-N ≥ 2000 mg/L)	-		10	-	150	15
							42.0095

(HJ941-2018) Q 1
Q Q≥1 Q
(1)1≤Q 10 Q1 ; (2)10≤Q 100 Q2 ; (3)Q≥100, Q3
7.2-1 Q 42.0095 10 ≤Q 100 Q2

7.2.2 (M)

(M)

7.2.2.1

(HJ941-2018) “

30 ” 7.2-2

7.2-2

( ) ( )	10/	40
a	5/	5 RTO 760-850 60
b	5/	(2024)
/	0	0

:a. ≥300 (p)≥10.0MPa,
GB30000.2 GB30000.13 b.

“ 30 ”
RTO
30

7.2.2.2
(HJ941-2018) 2

70
7.2-3

7.2-3

	(1) (2) ( ) (3)	0		0
	( )	8		
	(1) (2) (3)	0	0	0
	( )	8		
	(1) (2) ( )	0		0

	(2)	8		
	(1) ( ) ( ) (2)	0		0
		8		
	(1) (2)	0		0
	(2)	0		
		0		
	(1) (2) (3)	6		6
	(1) (2) (3) (4)	12		
	(1) (2)	0		0
		10		
3		8		0
		6		
		4		

		0	0	
				6

7.2.2.3

(HJ941-2018)

7.2-4

7.2-4

(M)	
M 25	M1
25 ≤ M 45	M2
45 ≤ M 65	M3
M ≥ 65	M4

7.2-3 M 36

7.2-4 M2

7.2.3 (E)

(HJ941-2018) “

1 2 3

E1 E2 E3 7.2-5 ”

1 2 3

7.2-5

1 (E1)	(1) 10 ( ) (2) 24 ( )
2 (E2)	(1) 10 (2) 10 (3)
3 (E3)	1 2

10

E3

7.2.4

(HJ941-2018) “

(E) (Q)

(M)， 7.2-6

7.2-6

(E)	(Q)	(M)			
		M1	M2	M3	M4
1 (E1)	1≤Q 10(Q1)				
	10≤Q 100(Q2)				
	100≤Q(Q3)				
2 (E2)	1≤Q 10(Q1)				
	10≤Q 100(Q2)				
	100≤Q(Q3)				
3 (E3)	1≤Q 10(Q1)				
	10≤Q 100(Q2)				
	100≤Q(Q3)				

7.2-1 Q 40.0095 10≤Q 100 ，

Q2 7.2-4

36 M2 7.2-5

E3 “ - (Q2-M2-E3) ”

7.3

7.3.1

7.1-1 Q 20.773 10≤Q

100 ， Q2 7.1-4

30 M2 7.1-5

E1

“ - (Q2-M2-E1) ”

7.2-1 Q 40.0095 10≤Q

100 ， Q2 7.2-4

36 M2 7.2-5

E3 “

- (Q2-M2-E3) ”

7.3.2

7.3.3

[- (Q2-M2-E1)+ - (Q2-M2-E3)]